MND Association

37th International Symposium on ALS/MND

Posters

9-11 December 2026
Amsterdam, the Netherlands

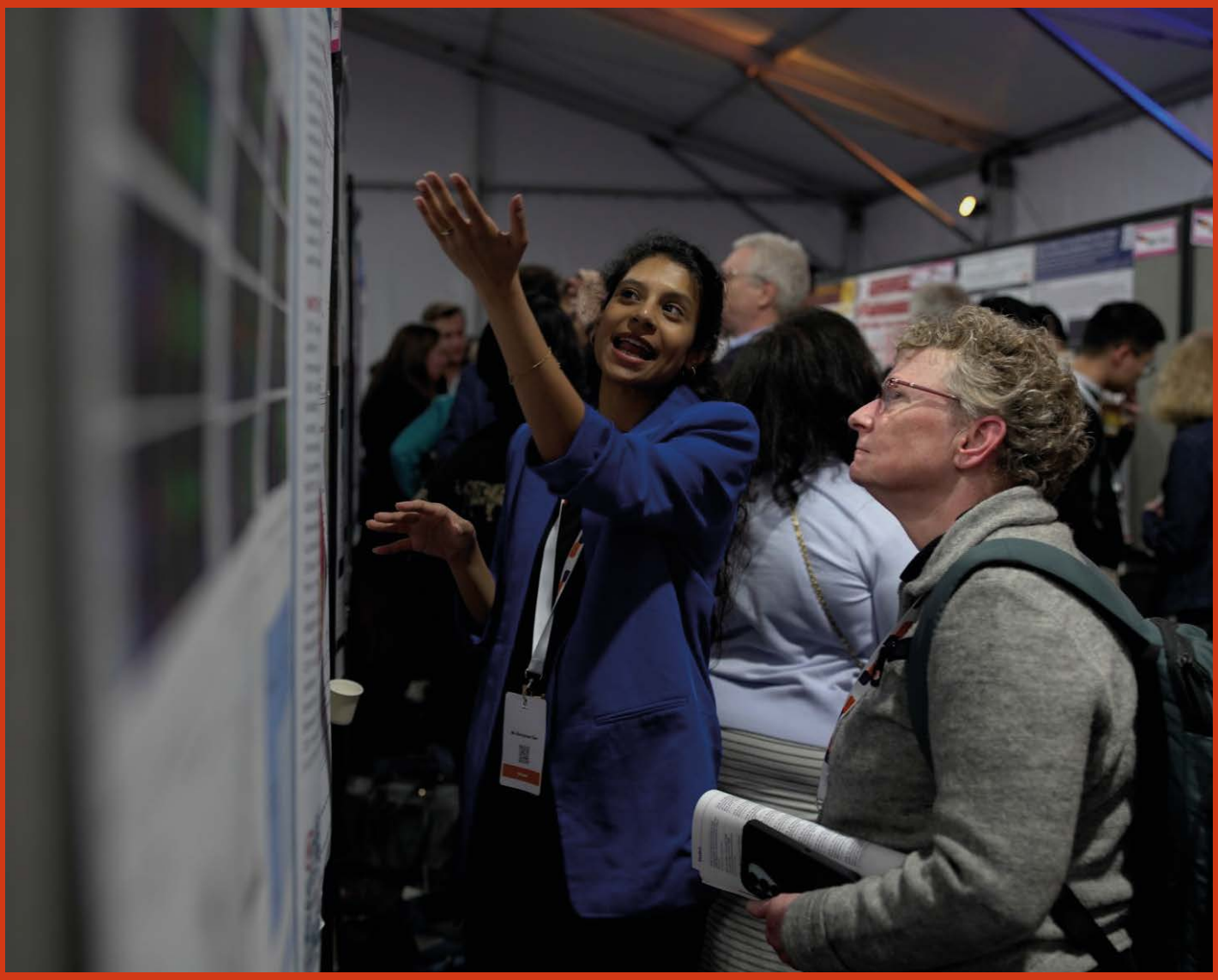

Hosts

ALS patiënten vereniging

ALS Centrum Nederland

ALS Stichting ALS Nederland

Organised by the
Motor Neurone Disease Association

Poster sessions

Poster Session A

Location: Europa Foyer

Wednesday 9 December 17:45 – 19:30

Theme 1	Epidemiology and informatics
Theme 2	Genetics and genomics
Theme 3	In vitro experimental models
Theme 7	Pre-clinical therapeutic strategies
Theme 10	Disease stratification and phenotyping
Theme 11	Cognitive and psychological assessment and support
WIP	Biomedical work in progress
WIP	Care practice work in progress

Poster Session B

Location: Europa Foyer

Thursday 10 December 17:45 – 19:30

Theme 4	In vivo experimental models
Theme 5	Human cell biology and pathology (including iPSC studies)
Theme 6	Tissue biomarkers
Theme 8	Clinical imaging and electrophysiology
Theme 9	Clinical trials and trial design
Theme 12	Clinical management and support
Theme 13	Primary lateral sclerosis and upper motor neurone degeneration

Poster session A

Location: Europa Foyer
Wednesday 9 December 17:45 – 19:30

Set up

Tuesday
17:30 onwards

Wednesday
07:30 — 17:30

Presentation
17:45 — 19:30

Take down

19:30 — 20:00

Themes to present

Theme number	Title	Colour	Code
Theme 1	Epidemiology and informatics	Purple	EPI
Theme 2	Genetics and genomics	Dark green	GEN
Theme 3	In vitro experimental models	Dark red	IVT
Theme 7	Pre-clinical therapeutic strategies	Gold	TST
Theme 10	Disease stratification and phenotyping	Violet	DSP
Theme 11	Cognitive and psychological assessment and support	Bright red	COG
WIP	Biomedical work in progress	Grey	BM
WIP	Care practice work in progress	Grey	CP

Please display your poster for the full duration of the session, remove at the end of the session.

Posters not removed on time will be removed by staff and set aside for collection, those not collected by Friday 10:30 will be discarded by eventorganisers.

For Health and Safety please do not leave poster tubes in the poster hall.

Wednesday 9 December – Poster Session A

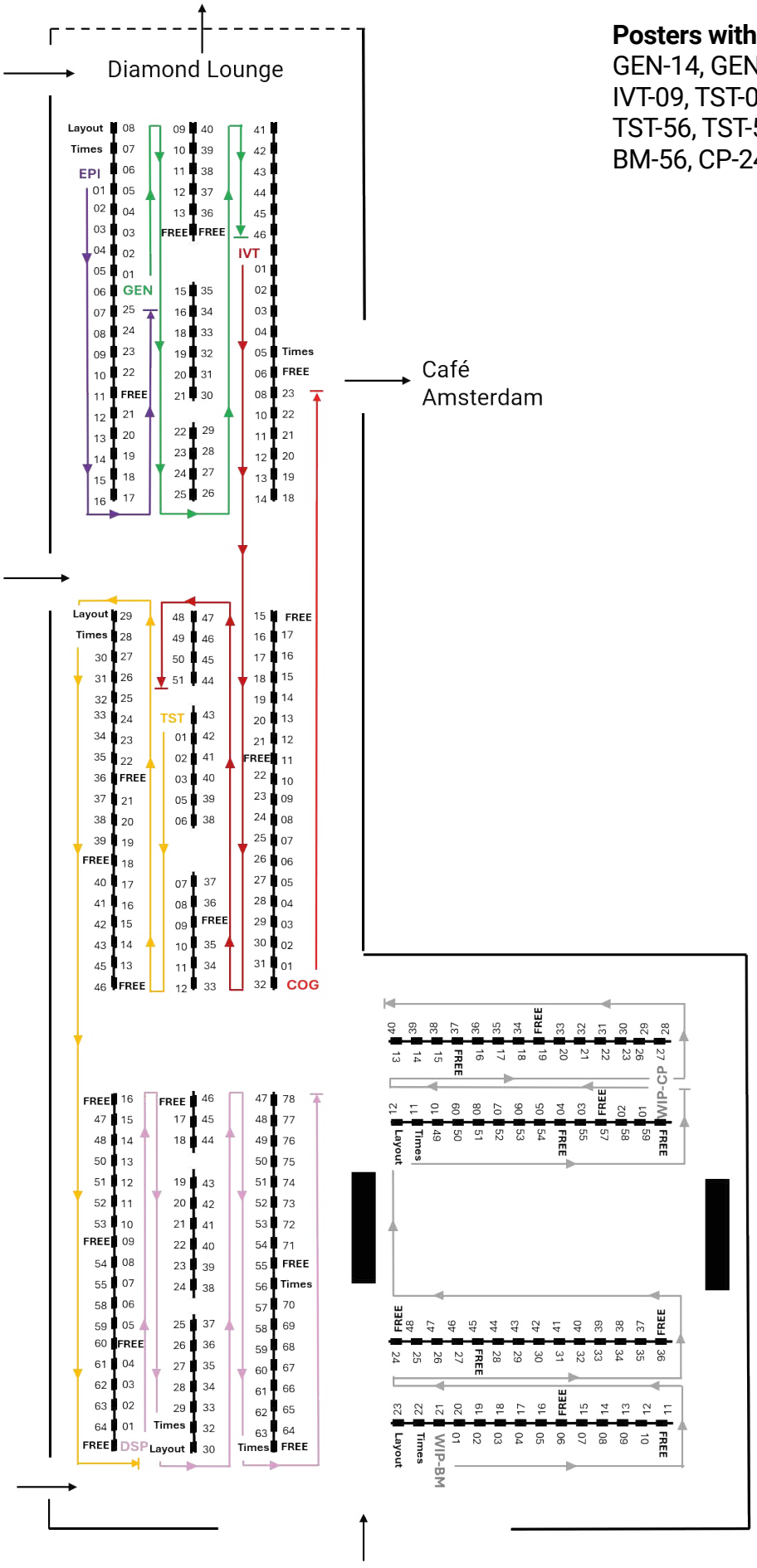

Posters withdrawn:
GEN-14, GEN-17, IVT-07, IVT-09, TST-04, TST-44, TST-49, TST-56, TST-57, DSP-31, BM-56, CP-24, CP-25

Poster session B

Location: Europa Foyer
Thursday 10 December 17:45 - 19:30

Set up

Thursday
12:00 — 17:30

Presentation
17:45 — 19:30

Take down

19:30 — 20:00

Themes to present

Theme number	Title	Colour	Code
Theme 4	In vivo experimental models	Light blue	IVV
Theme 5	Human cell biology and pathology (including iPSC studies)	Orange	HCB
Theme 6	Tissue biomarkers	Bright pink	BIO
Theme 8	Clinical imaging and electrophysiology	Light green	IMG
Theme 9	Clinical trials and trial design	Dark blue	CLT
Theme 12	Clinical management and support	Magenta	CMS
Theme 13	Primary Lateral Sclerosis and Upper Motor Neurone Degeneration	Terracotta	PLS

Please display your poster for the full duration of the session, remove at the end of the session.

Posters not removed on time will be removed by staff and set aside for collection, those not collected by Friday 10:30 will be discarded by event organisers.

For Health and Safety please do not leave poster tubes in the poster hall.

Thursday 10 December – Poster Session B

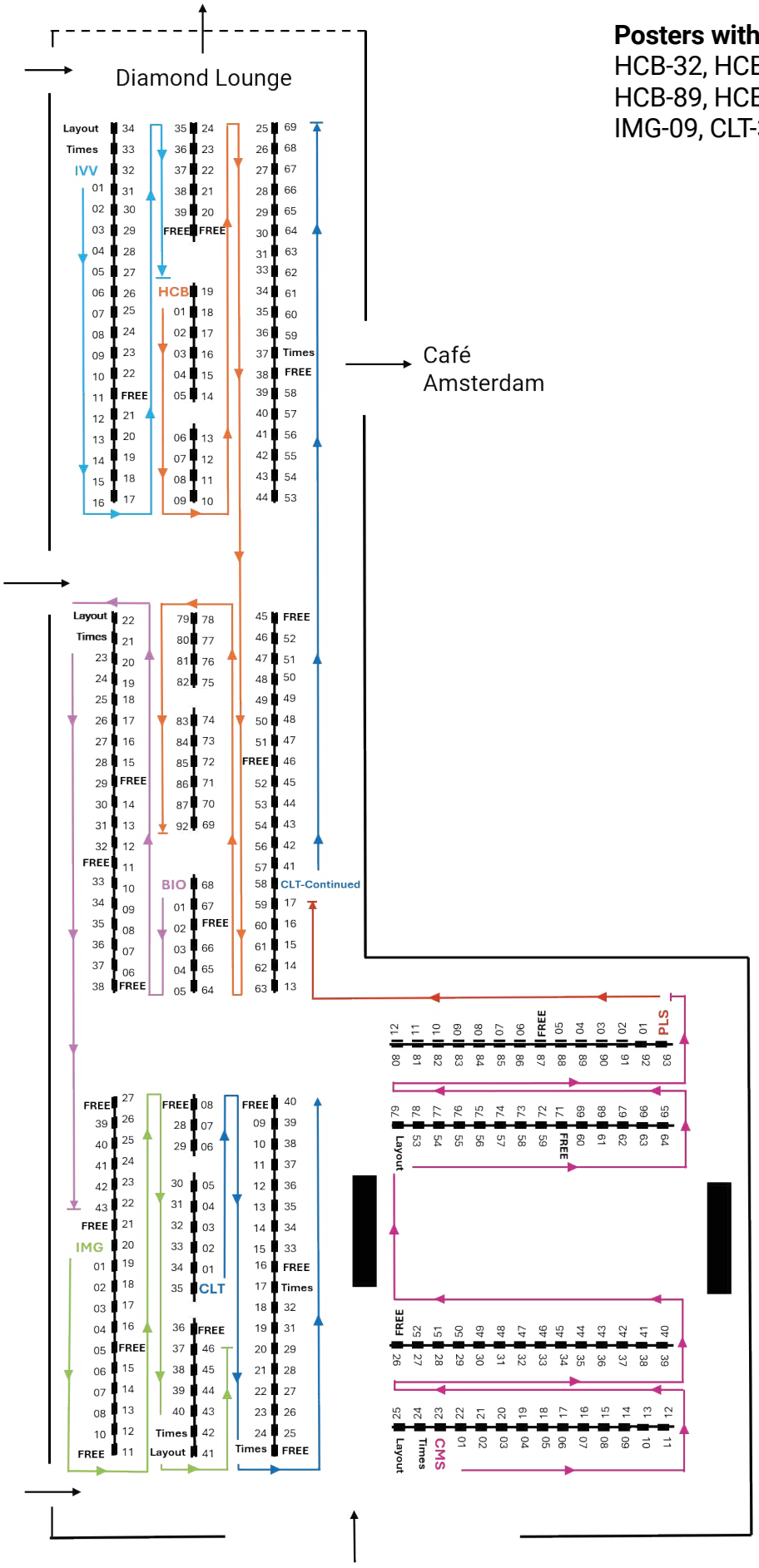

Posters withdrawn:
HCB-32, HCB-55, HCB-88, HCB-89, HCB-90, HCB-91, IMG-09, CLT-30, CMS-70

Posters

Theme 1
Epidemiology and informatics

EPI-01 Comparative analysis of urban and rural Canadians with ALS in the Canadian Neuromuscular Disease Registry
Dr Gordon Jewett

EPI-02 Elevated female incidence and distinct clinical patterns of motor neuron disease in rural Australia **Dr Amanda Wright**

EPI-03 Descriptive spatial epidemiology of sporadic MND from a single clinic in New South Wales, Australia, 2005 to 2025
Professor Dominic Rowe

EPI-04 Amyotrophic Lateral Sclerosis as a Multistep Process in the United States: A Population-Based Study **Dr Paul Mehta MD**

EPI-05 Multidisciplinary Clinic Attendance and Patterns of Care in the U.S. National ALS Registry, 2013–2023 **Dr Kevin Horton**

EPI-06 Military Service and Survival Among Persons with ALS in the U.S. National ALS Registry, 2011–2023 **Dr Kevin Horton**

EPI-07 Diagnostic differences between military veterans and non-veterans: data from the United States National ALS Registry
Mrs Jaime Raymond

EPI-08 Acute Wildfire Smoke Exposure and Increased Mortality Risk in ALS: A Time-Varying Cox Analysis of the MDA MOVR ALS Registry
Dr Jill Goslinga

EPI-09 Metal co-exposure in relation to the risk and prognosis of amyotrophic lateral sclerosis – an analysis of the Swedish ALSrisc Study
Dr Charilaos Chourpiliadis

EPI-10 Lead exposure and the effect on amyotrophic lateral sclerosis
Miss Sahana Rajesh

EPI-11 Assessing the risk of amyotrophic lateral sclerosis with lipid and muscle biomarkers
Mr Derek Wong

EPI-12 Abbreviated Pathogenic Process of ALS in a Population Isolate: A Gateway to Discovering Large-Effect Disease Drivers
Professor Ruben Cauchi

EPI-13 Phenotypic Heterogeneity and Familial Patterns in C9orf72-Associated ALS: Data from a Tertiary Referral Center in Central Italy
Dr Francesco Nicoletti

EPI-14 C9orf72-ALS Phenotype, Neurofilament Light, and Survival in the HEALEY ALS Platform Trial: Implications for Gene-Targeting Trials
Dr Jennifer Morganroth

EPI-15 National portrait of amyotrophic lateral sclerosis care in Brazil's Unified Health System (2023–2025): patient-level treatment, persistence, and geographic access from linked administrative microdata **Mrs Silvia Tortorella**

EPI-16 Real-World ALS Data: An ALS Reference Center Experience in São Paulo
Dr Frederico Jorge

EPI-17 The MND Register: Establishing a National Resource for Motor Neuron Disease Research **Mr John Jammal**

EPI-18 Neuromine: A Standardized, Collaborative Data Ecosystem for ALS Discovery
Dr Terri Thompson

EPI-19 APST ALS Data Repository: a consent-governed framework for sharing longitudinal ALS data with industry research partners
Dr Senthil Kumar Subramanian

EPI-20 The ALS Knowledge Portal: an open, federated data resource for ALS research
Dr Robert Allaway

EPI-21 AI Inference in ALS/MND Data Sharing: A Risk-Based Governance Framework for Ethical and Responsible Use of Derived Data
Mr Alexander Sherman

EPI-22 LLM-Guided Prompt Formulation for AI Conversational Analytics in ALS Clinical Research: Use Cases **Mrs Tamara Matthews**

EPI-23 The Precision ALS Data Platform
Mr Éanna Mac Domhnaill

EPI-24 PRECISION ALS: Insights from the European Patient Data Platform
Mr Éanna Mac Domhnaill

EPI-25 Social deprivation is associated with poorer ALS survival among women but not men: a population-based survival analysis from the Republic of Ireland **Mr Éanna Mac Domhnaill**

Theme 2
Genetics and Genomics

GEN-01 Familial versus sporadic ALS: assessing family histories under monogenic and polygenic inheritance models **Mr Paul Beele**

GEN-02 Genetic architecture of amyotrophic lateral sclerosis in Norway: risk variants, repeat expansions, and overlap between sporadic and familial disease **Dr Camilla Novy**

GEN-03 The Shared and Differential Genetic Risk Factors of Neurodegeneration **Mr Tomas D.S. Gomes**

GEN-04 Scalable reconstruction of ALS superpedigrees through combination of genetic and traditional genealogy **Ms Daphne Van Oosten**

GEN-05 Distance based spatial clustering enhances disease gene discovery in ALS **Ms Julia Hermens**

GEN-06 Disease-Specific Patterns and Clinical Characterization of OPTN Variants in ALS, FTD, and Glaucoma **Mrs Ema Jalsic**

GEN-07 Frequency and clinical impact of pathogenic variants and variants of uncertain significance in a cohort of 358 ALS patients **Dr Rossella Spataro**

GEN-08 Findings from differential network discovery in ALS using whole genome sequencing **Dr Alan Kaplan**

GEN-09 Next-Generation Short Tandem Repeat Detection in diagnostic genetic testing for ALS-FTD. **Dr Wouter Koole**

GEN-10 ALS- and FTD-associated repeat expansions exhibit genetic ancestry- and length-dependent associations with ALS as well as other neurodegenerative and developmental phenotypes **Miss Autumn Morrow**

GEN-11 Transcription start site identification informs ASO strategy against antisense repeat RNA in C9ORF72 ALS/FTD **Miss Mira Antonopoulos**

GEN-12 Whole blood transcriptome profile identifies motor neurone disease RNA biomarker signatures **Professor Sulev Koks**

GEN-13 Repeat-containing introns are a mechanistically grounded biomarker of disease progression in amyotrophic lateral sclerosis **Mr Koustav Pal**

GEN-14 POSTER WITHDRAWN

GEN-15 From Blood to Neurons in 3 weeks: Scalable Patient-Specific Direct Conversion to iNeurons **Miss Susanna Höppener**

GEN-16 A Rare Familial ALS Phenotype with Retinal Degeneration Associated with a Homozygous Candidate Variant in CFAP410 **Professor Toru Yamashita**

GEN-17 POSTER WITHDRAWN

GEN-18 No association of TMEM106B rs1990622 single nucleotide polymorphism with cognitive functioning in ALS. **Mr Elias Projahn**

GEN-19 Clinical, Genetic and Functional Evidence Supports RTN2 as an ALS Disease Gene **Professor Antonio Orlacchio**

GEN-20 A rare missense variant impacting NEK1 kinase function is associated with ALS **Professor David Brenner**

GEN-21 A novel DCTN1 variant promotes TDP-43 dysregulation in an in vitro model of amyotrophic lateral sclerosis **Dr Orietta Pansarasa**

GEN-22 Small RNA-Mediated Regulation of TDP-43 Aggregation **Dr Vera Zupunski**

GEN-23 Early loss of transcriptome information content in ALS iPSC-derived motor neurons occurs in the absence of detectable TDP-43 dysfunction **Dr Tom van Schaik**

GEN-24 Early cellular and spatial alterations in the spinal cord of SOD1-G93A mice revealed by single-cell spatial transcriptomics **Mr Kuo Liao**

GEN-25 SOD1 variants in patients with amyotrophic lateral sclerosis in Central Eastern Europe: from genetic testing to SOD1-targeted therapy **Mrs Magui Khazaal**

GEN-26 Identity-by-descent segment detection and haplotype analysis of the C9orf72 repeat expansion and a pathogenic SOD1 variant in a Norwegian ALS cohort **Mrs Maria Fahlström**

GEN-27 Hidden C9orf72 expansions and true phenocopies in ALS: insights from short- and long-read sequencing **Ms Bi-nan Wang**

GEN-28 Identity-by-descent analyses reveals C9orf72 discordance, cryptic relatedness, and expanded ALS pedigrees **Dr Ciara O'Donoghue**

GEN-29 An expanded picture of C9 repeat discordance in Irish ALS pedigrees **Dr Ross Byrne**

GEN-30 Targeted long-read sequencing to investigate somatic instability and epigenetic signatures of the C9orf72 hexanucleotide repeat expansion in blood **Dr Beatrix Cardus**

GEN-31 Targeted long-read sequencing to investigate cell type-specific dynamics of the C9orf72 hexanucleotide repeat expansion in postmortem brain **Dr Beatrix Cardus**

GEN-32 Modulation of C9orf72 Expression via BET Bromodomain Inhibition **Miss Sophie Breen**

GEN-33 Penetrance of C9orf72-related neurodegeneration: calling for a federated analysis **Dr Andrew Douglas**

GEN-34 Assessing penetrance in genetic ALS: Implications for genetic counseling and predictive testing **Ms Laynie Dratch**

GEN-35 Implementation of ALS Genetic Testing Guidelines: Uptake, Impact, and Opportunities at a Single ALS Center. **Ms Laynie Dratch**

GEN-36 Genotype–phenotype correlation and penetrance in familial ALS associated with SOD1, C9orf72 and TARDBP **Miss Laura Expósito Blázquez**

GEN-37 Taskforce on Genetic Counselling and Testing in ALS/MND: Developing Global Consensus-Based Guidelines **Professor Ammar Al-Chalabi**

GEN-38 Improving genomics for people with Motor Neurone Disease: development of a pathway highlighting the pivotal role of a neurogenetics clinical nurse specialist (CNS) and close multidisciplinary working between neurology and clinical genetics **Dr Clare Galtrey**

GEN-39 A Cloud-Based Framework for Well-Powered Whole-Genome Sequencing Analysis in ALS **Mr Kees de Jong**

GEN-40 The New York Genome Center ALS Consortium resource integrates postmortem tissue transcriptomics and whole genome sequencing to empower biological discovery **Dr Jack Humphrey**

GEN-41 Epigenomic and transcriptomic profiling of purified neural nuclei reveals cell-type-specific molecular signatures in ALS **Dr Emma Dempster**

GEN-42 Integrating Transcriptomic and Epigenomic Landscapes to Decode Tissue Specific Regulatory Networks in ALS **Ms Megha Gupta**

GEN-43 Epigenetic regulation in the ALS brain: identifying novel cell type-specific targets **Dr Alexandros Frydas**

GEN-44 Epigenetic profile of ALS progression shows the importance of immune-related pathways **Mrs Polina Merbaum**

GEN-45 Longitudinal expression and epigenetic profiles of MAP1B and TARDBP as peripheral markers for clinical heterogeneity in sporadic Amyotrophic Lateral Sclerosis **Dr Stella Gagliardi**

GEN-46 Proteomic characterization of corpora amylacea in post-mortem brains of MAiD-end-of-life ALS patients **Mr Alexandre Paquet**

Theme 3
In Vitro Experimental Models

IVT-01 Loss of NPTX2 links TP53 activation to TDP-43-pathology in human iPSC-derived motor neurons **Dr Christina Steffke**

IVT-02 KANK1 structure perturbation links cytoskeletal dysregulation to TDP-43 pathology in ALS **Dr Rafaella Konstantinou**

IVT-03 Cellular stress induced posttranslational modifications of TDP-43 **Professor Boris Rogelj**

IVT-04 tRNA-derived, small non-coding RNA 5'tiRNAGlu-CUC modulates FUS condensate assembly and stress granule recruitment **Dr Qilian Ma**

IVT-05 Identifying condensation partners of TDP-43 in ALS patient-derived motor neurons following oxidative and proteostatic stress recovery **Mr Benjamin Wymann**

IVT-06 Characterizing proteostasis defects in human iPSC-derived motor neurons and astrocytes with TARDBP mutations **Dr Jimmy Beckers**

IVT-07 POSTER WITHDRAWN

IVT-08 Phenotypic characterisation of TDP-43 pathology in sporadic amyotrophic lateral sclerosis using patient derived induced pluripotent stem cells **Dr Yuval Gurfinkel**

IVT-09 POSTER WITHDRAWN

IVT-10 Synaptoproteomic analysis of human C9ORF72-ALS/FTD air-liquid-interface cortical organoids indicates changes in synaptic transmission and organization **Ms Channa Jakobs**

IVT-11 Using Drosophila Melanogaster to Assess TDP-43 Loss- and Gain-of-Function on Behaviour and Synaptic Integrity **Miss Anna McFarlane**

IVT-12 Establishment of a TDP-43-Related ALS Disease Model Using Non-human Primate (NHP) iPSC-Derived Motor Neurons and Evaluation of a Nucleic Acid Therapeutic Platform **Dr Duolin Li**

IVT-13 A human iPSC-derived CST-on-Chip reveals cell-specific effects of cortical TDP-43 loss of function **Dr Andriana Charalampopoulou**

IVT-14 Comparative Analysis of TDP-43 Pathology Across Preclinical ALS Models and Human Disease **Dr Kerry Shea**

IVT-15 Comparative Analysis Of In-Vitro Systems For TDP-43 Pathology **Mr Roland Rabl**

IVT-16 Characterising human iPSC-derived wild-type and TDP-43 mutant PVi **Dr Aleksandra Mech**

IVT-17 Adipose-Derived Neural Stem-Like Cells as a Human Model of ALS Motoneurons **Professor Marta Martinez Morga**

IVT-18 Generation of C9orf72 repeat knock-in iPSC lines for modelling ALS and FTD **Dr Jonas Mechtersheimer**

IVT-19 Multiscale HD-MEA profiling uncovers early hyperexcitability and axonal dysfunction in a human iPSC-derived GRN-FTD model **Dr Marian Hruska-Plochan**

IVT-20 Pooled CRISPR kinome screens in human motor neurons reveal druggable modulators of TDP-43 pathology **Miss Tania Atienzar**

IVT-21 End-to-end in vitro drug discovery platform to evaluate therapeutic agents for TDP-43 related neurodegenerative diseases **D Mark Musters**

IVT-22 Dissecting neuronal TDP43 loss-of-function at human neuromuscular junctions reveals muscular DLK1 as a potential therapeutic target for ALS **Dr Samantha Ho**

IVT-23 Activated T-Lymphocyte Secretomes from Patients with ALS Impair Human Neuromuscular Junction Structure and Function **Dr Razan Alomosh**

IVT-24 Uncovering a novel muscle-derived pathway implicated in neuromuscular junction denervation during ALS **Ms Marion Boyer**

IVT-25 Utilizing The Hesperos Human-on-a-Chip® Neuromuscular Junction System for Modeling ALS and Evaluating Therapeutic Efficacy **Mr Rocky Brighton**

IVT-26 CUSTOM-Muscle: Modular PDMS Scaffolds for Customisable, Oriented Neuroskeletal Muscle Constructs and Disease Modelling **Dr Eugenia Carraro**

IVT-27 Machine learning-directed exercise protocol development for 3D neuromuscular junction tissues **Dr Mohammad Khoonkari**

IVT-28 Lentiviral Optogenetic Engineering of Human 3D Neuromuscular Junctions for Disease Modeling Applications **Dr Mohammad Khoonkari**

IVT-29 Exploring the non-cell autonomous contribution of C9ORF72-HRE in myotubes to NMJ disruption and motor neuron degeneration in ALS **Miss Anna Wiersema**

IVT-30 Hydrogen Sulphide as a non-cell autonomous mediator in ALS **Dr Patrizia Longone**

IVT-31 Investigation of the role of WDR49 in astrocytes in ALS pathogenesis **Dr Marianne King**

IVT-32 Effects of mGluR5 negative allosteric modulation on human-derived astrocytes and motorneurons from ALS patients **Professor Tiziana Bonifacino**

IVT-33 YWHAZ/14-3-3ζ Upregulation Drives Lipid Accumulation and Neurotoxic Astrocyte Activation through Disrupting ATG9A-Mediated Lipophagy in FUS-Mutant ALS **Professor Zhangyu Zou**

IVT-34 Distinct metabolic alterations in TARDBP-mutant iPSC-derived microglia **Ms Lara Nikel**

IVT-35 Unravelling the role of microglia in Sporadic Amyotrophic Lateral Sclerosis using HMC3 Human Microglial Cell Line **Dr K. Vijayalakshmi**

IVT-36 Glial Phagocytosis As A Mechanism Of Synapse Loss In ALS **Dr Zsofia Laszlo**

IVT-37 Patient derived C9ORF72 pericytes uncover pericyte-intrinsic mechanisms of neurovascular dysfunction and barrier disruption in MND **Mr Andrew Quattrocchi**

IVT-38 C9orf72 is required for normal presynaptic vesicle release at human synapses **Mr Sid Suri Dhawan**

IVT-39 Recurrent fusion transcripts in ALS arise from aberrant RNA processing and perturb cell viability in vitro **Dr Adel Boudi**

IVT-40 Exploring the Interplay Between Axonal Metabolic Alterations and Degeneration in ALS **Miss Sofia Fredin**

IVT-41 Dynamic failure: mitochondrial transport and network abnormalities in an in vitro model of ALS **Dr Noemi Scimia**

IVT-42 Investigating dysregulated membrane lipid raft homeostasis in ALS **Dr Tobias Moll**

IVT-43 Investigating cellular senescence as a driver of motor neuron vulnerability in ALS **Mr Magdy Mekdad**

IVT-44 Endogenous SMN protein heterogeneity drives selective motor neuron vulnerability in motor neuron diseases **Dr Joshua Thomas**

IVT-45 CCDC146-dependent primary cilia function modifies motor neuron vulnerability in ALS **Miss Connie Treanor**

IVT-46 Methylcobalamin attenuates oxidative stress-induced neuronal damage in human iPSC-derived motor neurons **Mr Ryota Taguchi**

IVT-47 Activation of FUNDC1-dependent mitophagy by Urolithin A rescues motor neuron degeneration in OPTN-mutant ALS **Fuchen Liu**

IVT-48 Development and characterisation of a novel patient-derived skeletal muscle model for studying muscle pathology in sporadic Amyotrophic Lateral Sclerosis (ALS) **Dr Patricia Rico**

IVT-49 The OPN-MMP9 axis in patient-derived spinal cord organoids of familial ALS and SH-SY5Y models **Miss Camilla Viola**

IVT-50 A human spinal myelinating organoid platform for modelling TDP-43-dependent myelin pathology in ALS **Dr Laura Planas-Serra**

IVT-51 Modelling ALS with iPSC-derived motor neurons, microglia and astrocytes **Dr Jessica Tilman**

IVT-52 POSTER WITHDRAWN

Theme 4
In Vivo Experimental Models

IVV-01 Role of genetic risk factor SCFD1 in ALS: from GWAS discovery to disease mechanism **Professor Ruben Cauchi**

IVV-02 Genetic modifiers of C9-ALS motor phenotypes in Drosophila **Dr Hrvoje Augustin**

IVV-03 Excessive LIMK signalling drives CP-AMPAR-dependent synaptic dysfunction following C9orf72 loss **Miss Lauren Joe**

IVV-04 Spinal V2 interneurons contribute to the etiopathogenesis of Amyotrophic Lateral Sclerosis **Mr Luca Goffin**

IVV-05 New Insights into ALS Pathophysiology: Is Spinal Cord Aging Linked to Impaired EN1 Transfer? **Dr Christophe Carreau**

IVV-06 Neuronal ERVK integrase activity causes DNA damage-driven motor and cognitive deficits in mice **Professor Renée Douville**

IVV-07 Neuronal Loss of Thioredoxin Is Sufficient to Trigger Motor Neuron Degeneration and TDP-43 Pathology **Professor Eftekhar Eftekharpour**

IVV-08 Generation of a Novel ALS Knock-in Mouse Model with Double TDP-43 Mutations **Dr Yohei Iguchi**

IVV-09 A new tunable and conditional mouse model of ALS **Dr Chiara Marullo**

IVV-10 Histological Evaluation Of An Inducible Intrathecal Aav-Tdp-43 Als Mouse Model **Mr Roland Rabl**

IVV-11 Drosophila as an in vivo model to dissect p62/Ref(2)P-dependent P-bodies in neuronal and non-neuronal ALS/MND pathology **Dr Holly Stephenson**

IVV-12 A single-nucleus exploration of the TDP-43 Q331K knock-in mouse brain: Profiling 1 million nuclei across sex, development and disease **Mr Leon Crowley**

IVV-13 Characterising regional and synaptic proteome changes in a TDP43-Q331K mouse model **Dr Dinja van der Hoorn**

IVV-14 TDP-43 pathology drives motoneurone hyperexcitability in a cell-autonomous manner **Dr Claire Meehan**

IVV-15 Network dysfunction and cognitive impairment in a TDP-43 mouse model of MND/FTD **Dr Annika van Hummel**

IVV-16 Early neuromuscular synaptopathy precedes network dysfunction in TDP-43Q331K mice and is reversible **Dr Alannah Mortimer**

IVV-17 In Vivo Investigation of Astrocyte-Specific TDP-43 Pathology as an Early Driver of ALS Pathogenesis **Miss Madison Kane**

IVV-18 Astrocyte-mediated glutamate homeostasis regulates motor neuron positioning in zebrafish **Dr Kazuhide Asakawa**

IVV-19 Deconstructing the roles of oligodendrocytes and neurons in mediating TDP43-related MND **Dr Marcus Keatinge**

IVV-20 Role of TDP-43 Proteinopathy in Cell and Cell-Non-Autonomous De-repression of LINE-1 in Mice **Ms Ariel Nieves**

IVV-21 Zebrafish models of neuron-specific TDP-43 variants reveal distinct disease mechanisms, and that cytoplasmic TDP-43 toxicity can be rescued by nuclear TDP-43 **Dr Marco Morsch**

IVV-22 Novel C. elegans and mouse models uncouple antisense RNA and DPR toxicity from sense-derived pathology in C9ORF72 ALS/FTD **Dr Paschalis Kratsios**

IVV-23 Innervation and cargo-specific axonal transport impairments in FUS-ALS mice. **Dr Nicol Birsa**

IVV-24 Early Caudoputamen Atrophy In Fusδnls/+ Mice Is Associated With Striatal Neuroinflammation And Behavioural Deficit **Dr Jelena Scekic Zahirovic**

IVV-25 Investigating the contribution of skeletal muscle in FUS-associated ALS **Mr Javier Lobo Mancheno**

IVV-26 NCOA4-Mediated Ferritinophagy Drives Ferroptosis in FUS-Mutant Amyotrophic Lateral Sclerosis via Mutant FUS Sequestration of Nrf2 mRNA **Miss Zhouyi Wang**

IVV-27 Temporal changes in stress granule- and myogranule-associated proteins in skeletal muscle during ALS disease progression **Mr Saddam Muhammad Ishaq**

IVV-28 Satellite cells as regulators of regenerative failure and progression-associated muscle pathology in ALS **Dr Giovanni Nardo**

IVV-29 Dissecting the role of skeletal muscle in TDP-43-associated ALS **Dr Hanna Walgrave**

IVV-30 Distal Neuromuscular Junction Dysfunction in SLC5A7-Related Inherited Motor Neuron Disease **Dr Takashi Yoshimura**

IVV-31 Prodromal gene expression changes in the spinal cord of a large animal model of motor neuron degeneration **Dr Megan Baird**

IVV-32 Motor neuron-intrinsic IFN-I signalling is neuroprotective in the early phase of ALS in mice **Professor David Brenner**

IVV-33 A novel mouse model for sporadic ALS recapitulates systemic extracellular vesicle-mediated pathology **Eva Kritikou**

IVV-34 Inhibition of the calcium activated potassium channel SLO-1 reduces age-related protein toxicity in Caenorhabditis elegans **Dr Lale Güngördü**

IVV-35 Investigating Low-Dose Doxycycline to Extend the Disease Window in the rNLS8 ALS Mouse Model **Dr Stavroula Tsitkanou**

IVV-36 Effects of Long-Term, Intense Exercise Training on ALS Onset and Progression: A Study in the rNLS8 ALS Mouse Model **Dr Stavroula Tsitkanou**

IVV-37 Longitudinal proteogenomics reveals reversible, stage-specific isoform switching in ALS/FTD **Dr Phillip West**

IVV-38 VISTA-IGSF11-mediated protective microglia-astrocyte crosstalk attenuates neuroinflammation and disease progression in ALS **Mrs Liru Wu**

IVV-39 Gut microbiota ameliorates disease progression in ALS mice by regulating NK cell subsets **Dr Wenhua Deng**

IVV-40 POSTER WITHDRAWN

Theme 5
Human Cell Biology and Pathology (including iPSC studies)

HCB-01 Establishment of comprehensive ALS brain bank resource, Tokyo **Professor Shigeo Murayama**

HCB-02 An Open Science Biobanking Platform Integrating ALS Research **Mr Nicolas Ferry**

HCB-03 GoALS – An Integrated ALS Drug Development Platform **Dr Ana Rita Machado Santos**

HCB-04 Pathology-defined cell states reveal robust transcriptional signatures across ALS cortical single-nucleus RNA-seq studies **Ms Charlotte Van Dijk**

HCB-05 Transcriptomic Analysis Identifies Region-Dependent Alterations in Primary and Secondary Regions Affected in the ALS-FTD Spectrum Involving Canonical Transcripts and Cryptic Exons **Mr Pol Mengod-Soler**

HCB-06 Paired Single-nucleus Multiome Analysis of Human Motor Cortex and Spinal Cord Identifies GRM5-mediated Glutamatergic Overactivation in Amyotrophic Lateral Sclerosis **Dr Seiichi Nagano**

HCB-07 DNA Replication as a Determinant of Motor Neuron Fate in ALS **Dr Jonathan Plessis-Belair**

HCB-08 CHMP2B: a central player in ALS and FTD pathogenesis **Dr Coyne Alyssa**

HCB-09 Environmental toxicants as potential initiators of early disease biology in ALS **Miss Tatiana Langerova**

HCB-10 Interaction of GBA1/2 and SARDH in amyotrophic lateral sclerosis **Miss Akanksha Jangid**

HCB-11 DnaJC7 shows unique cortical and hippocampal expression patterns between ALS and ALS with cognitive impairment, with some cases carrying novel DnaJC7 mutations **Professor Michael Strong**

HCB-12 Dissecting TDP-43 loss- and gain-of-function to understand selective motor neuron vulnerability in ALS **Dr Rianne de Jongh**

HCB-13 TDP-43 autoregulation informs the design of a splicing reporter to study TDP-43 pathomechanisms **Dr Martina Hallegger**

HCB-14 TDP-43 Loss of Function disrupts the m5c RNA methylation: investigating novel landscapes in the epitranscriptomics of ALS **Dr Marcello Giunta**

HCB-15 SFPQ and TDP-43 Form a Pathogenic Feedback Loop in Motor Neuron Disease **Dr Marco Morsch**

HCB-16 SFPQ intron retaining transcripts are pathogenic in human iPSC-derived motor neurons **Dr Stephanie Taylor**

HCB-17 Convergent regulation of ADARB2 by SFPQ and TDP-43 promotes motor neuron degeneration in ALS **Dr Giulia Tyzack**

HCB-18 Compartment-specific disease mechanisms in human models of TDP-43 proteinopathy **Dr Bilal Khalil**

HCB-19 A TDP-43-bound transcript downregulated presymptomatically and preceding STMN2 across integrated ALS transcriptomic datasets: candidate early biomarker **Dr Rebecca Graham**

HCB-20 Non-linear Combinatorial Analysis of Blood Transcriptomes Identifies PRKAR1A as a Regulator of TDP-43 Pathology in Amyotrophic Lateral Sclerosis **Dr Keiko Imamura**

HCB-21 Investigating the role of AARS1 cryptic splicing in ALS pathogenesis **Dr Francesca Mattedi**

HCB-22 Matrin 3 Regulation of m6A RNA Modification as a Novel Mechanism in Neurodegeneration **Dr David Medina**

HCB-23 Resolving paralogue-specific RNA-processing functions of hnRNP H1 and H2 in human iPSC-derived neurons **Miss Sara Milani**

HCB-24 Dynamic interactome of TDP-43 during stress and recovery **Professor Boris Rogelj**

HCB-25 Automated quantification of TDP-43 inclusion subtypes using machine learning image analysis **Dr Mari Carmen Pelaez**

HCB-26 Impaired chaperone-mediated autophagy may contribute to TDP-43 pathology and motor neuron vulnerability in sporadic ALS **Dr Daniel Garrigos**

HCB-27 The TDP-43–HDAC6 Axis Drives Autophagy Dysfunction in Sporadic ALS **Dr Matteo Bordoni**

HCB-28 Modulating the autophagy-lysosome pathway in iPSC-derivedneurons carrying ALS/FTD variants to identify new therapeutictargets **Professor Vincent Picher-Martel**

HCB-29 Autophagy-associated signatures in human derived fibroblasts from ALS patients **Dr Francesca Ciaiola**

HCB-30 Organelle stress routing encodes genotype-specific TDP-43 vulnerability and therapeutic rescue windows in human ALS neurons **Dr Aleksandar Rajkovic**

HCB-31 Identification of the TBK1-IFNβ-immunoproteasome axis as a neuron-specific pathway that alleviates TDP-43 pathology in ALS **Mr Shohei Sakai**

HCB-32 POSTER WITHDRAWN

HCB-33 Functional evaluation of ASO candidates targeting a novel RNA regulatory element for sporadic ALS **Ms Yurika Shimizu**

HCB-34 Targeting aberrant OGT intron retention and O-GlcNAcylation in ALS iPSC-derived motor neurones **Dr Yiran Wang**

HCB-35 Investigating the role of mitochondrial dysfunction in driving synaptic alterations in C9orf72-related ALS **Dr Samrajni Banerjee**

HCB-36 Nuclear DNA damage is a primary driver of mitochondrial dysfunction in a C9ORF72 ALS cell model **Professor Silvia Barabino**

HCB-37 RNA sequencing identifies disease- and activity-associated transcriptional programmes in a human model of C9orf72 motor neuron degeneration **Dr Lucy Farrimond**

HCB-38 Synaptic Dysfunction in the Context of C9orf72 Haploinsufficiency **Mr Bryan Kartono**

HCB-39 Cell type-specific microRNA signatures reveal novel therapeutic targets in C9ORF72-associated ALS neuromuscular crosstalk **Claudia Malacarne**

HCB-40 Investigating the Relationship Between Connexin-43 Expression and Astrocyte-Mediated Motor Neuron Toxicity in a C9orf72 Model of Amyotrophic Lateral Sclerosis **Dr Rebecca Stevenson**

HCB-41 Microglia-dependent synaptic dysregulation and complement activation in C9orf72-ALS/FTD iPSC-derived motor neuron-microglia co-cultures **Dr Björn Vahsen**

HCB-42 Characterising the Glyoxalase System in C9orf72 Repeat Expansion ALS **Miss Hannah Timmons**

HCB-43 Injury-induced local axonal translation of importin-β1 supports motor axon regeneration and is disrupted by dipeptide repeat proteins in C9orf72 ALS **Dr Arens Taga**

HCB-44 Unbiased CRISPR knockout screening on dipeptide repeat translation from C9ORF72 antisense CCCCGG repeat transcripts **Dr Yoshifumi Sonobe**

HCB-45 RNA-RNA proximity ligation assay enables detection and relative quantification of cytoplasmic C9orf72 antisense C4G2 repeat RNA-associated signals **Dr Siiri Suominen**

HCB-46 Developing an isogenic hiPSC panel to dissect the contribution of liquid-liquid phase separation and RNA-binding to ALS-linked FUS cytotoxicity. **Mr Juan Alcalde**

HCB-47 FUS at the synapse: consequences of the P525L mutation in iPSC-derived cortical neurons **Mx Emma Dyke**

HCB-48 Retrotransposable elements are activated in FUS-ALS **Mr Anže Karlek**

HCB-49 RIG-I Mediated Neuron-Specific IFN Type 1 Signaling In FUS-ALS InducesNeurodegeneration And Offers New Biomarker-Driven Individualized TreatmentOptions For (FUS-)ALS **Dr Marcel Naumann**

HCB-50 Defining the impact of ALS-associated FUS dysfunction on extracellular vesicle-mediated miRNA signalling **Dr Katherine White**

HCB-51 A CRISPR-Engineered Isogenic iPSC Platform Reveals Extracellular Matrix and Synaptic Transcriptional Dysregulation in FUS P525L Motor Neurons **Mx Emma Dyke**

HCB-52 The ALS-FTD linked mutation CCNFS621G drives early alterations in mitochondrial phenotypes in mouse and human models **Mr Liam Robinson**

HCB-53 Functional and Molecular Profiling of Sporadic and Familial ALS Neurons Reveals Network Deficits, Altered Morphology, and TDP-43 Mislocalization **Dr Ana Carreras Mascaro**

HCB-54 Modelling sporadic ALS-TDP pathogenesis **Miss Yi Jia (Celine) Chye**

HCB-55 POSTER WITHDRAWN

HCB-56 Long-read RNA sequencing of synapses reveals novel transcript architecture that alters the microenvironment of the presynaptic terminal and influences early synaptopathy in TDP-43 amyotrophic lateral sclerosis **Dr Emma Clayton**

HCB-57 Characterising Early Synaptic Breakdown in ALS **Dr Zsofia Laszlo**

HCB-58 Modelling TDP-43 Proteinopathy in hiPSC-derived Skeletal Muscle and Neuromuscular Assembloids **Ms Yiyun Zhang**

HCB-59 CRABP1 as a converging downstream effector of primary cilia dysfunction in Amyotrophic Lateral Sclerosis **Miss Matilde Contardo**

HCB-60 Investigating the role of SOD1 in sporadic amyotrophic lateral sclerosis patients using structural proteomics **Mr Thomas Marlow**

HCB-61 Investigation of p75-RET death complexes in ALS **Ms Hannah Greenland**

HCB-62 Intermediate length expansion in Ataxin-2 associated with Amyotrophic Lateral Sclerosis impairs peripherin regulation and endolysosomal trafficking in iPSC-derived motor neurons **Dr Katja Burk**

HCB-63 Toxicity of MAPT 4R RNA Contributes to Motor Neuron Degeneration in ALS **Dr Hamish Crerar**

HCB-64 NRF2 Pathway Dysfunction Underlies Astrocyte-Mediated Motor Neuron Toxicity in Sporadic ALS **Dr Katie Bowden**

HCB-65 Multi-omic profiling reveals that reduction of ERAP2 corrects protein and lipid alterations in ALS astrocytes **Dr Ben Clarke**

HCB-66 Distinct mitochondrial responses to immune stimulation in MND/FTD associated human microglia **Dr Ilke Guntan**

HCB-67 Adaptive immunity in non-motor area is relevant to motor neuron degeneration in sporadic ALS spinal cord **Dr Shintaro Hayashi**

HCB-68 Linking astrocyte lipid dysfunctions and neuroinflammation in ALS **Miss Yuewen Wu**

HCB-69 Interpretable Machine Learning for Natural Killer Cell Target Discovery in Sporadic ALS: Cross-Cohort Validation and the Single-Cell Misannotation Problem **Mr Zachary Mathes**

HCB-70 Peripheral Immune Activation versus Central Glial Collapse in ALS: Ensemble Machine Learning Surfaces Convergent Network Hubs **Mr Zachary Mathes**

HCB-71 Dysregulated ECM gene signatures and ECM-remodelling gene networks in ALS **Mr Jianing Lin**

HCB-72 Distinct extracellular matrix remodeling in sporadic amyotrophic lateral sclerosis **Miss Engie Mostafa**

HCB-73 Multimodal Characterization of the Extracellular Matrix Alterations Over Amyotrophic Lateral Sclerosis Pathogenesis **Dr Alberto Ortega**

HCB-74 Divergent immune/inflammatory and proto-myofibroblast activation trajectories of perivascular fibroblasts in the human ALS and control spinal cord **Dr Yangfan Zhou**

HCB-75 Investigating Lipid Dysregulation In ALS Derived Stem Cells **Dr Emily Annuario**

HCB-76 Single-neuron analyses of mitochondrial respiratory chain complexes and mtDNA in key central nervous system areas in ALS **Dr Tale Bjerknes**

HCB-77 Subcellular proteomics identifies altered protein distribution in iPS-derived neurons from ALS/FTD patients **Dr Ruxandra Dafinca**

HCB-78 Global proteomics identifies shared and mutation-specific perturbed pathways in ALS patient-derived iPSC-motor neurons **Dr Leanne Jiang**

HCB-79 Autoantibodies in ALS: loss of binding avidity to neurofilament and TDP-43 and direct mitochondrial and caspase-3 injury in neuronal cell models **Dr Ellie Sturmey**

HCB-80 SARS-CoV-2 Nucleocapsid (N) Protein forms biomolecular condensates and interacts with ALS-associated RNA binding proteins in vitro **Mr Joseph-Patrick Clarke**

HCB-81 Characterization of Extraneuronal TAR DNA-Binding Protein 43/SARS-CoV-2 N Protein Condensates in Amyotrophic Lateral Sclerosis **Miss Alexandra Keating**

HCB-82 Annexin A11 aggregation as a shared neuropathological signature across rare ALS/MND genes: a screen of SETX, MATR3 and TBK1 cases **Dr Luca Biasetti**

HCB-83 Annexin A11 mutations and nuclear envelope dysfunction in ALS **Miss Shujing Li**

HCB-84 From Liquid to Solid: ALS/FTD-Linked p62 Mutations Remodel Biomolecular Condensates **Dr Evelina Valionyte**

HCB-85 Resveratrol Rescues Shared and Mutation-Specific Pathological Vulnerabilities in Patient-Derived ALS iPSC Motor Neurons **Professor Min Deng**

HCB-86 Advancing Drug Screening for Amyotrophic Lateral Sclerosis (ALS) Using Human iPSC-Derived 3D Brain Organoid Models **Professor Min Deng**

HCB-87 Impact of INS1202 AAV9-SOD1-shRNA Gene Therapy on Motor Neuron Survival and Hallmarks of Neurodegeneration in a Sporadic ALS Patient-Derived In Vitro Model **Dr Laura Ferraiuolo**

HCB-88 POSTER WITHDRAWN

HCB-89 POSTER WITHDRAWN

HCB-90 POSTER WITHDRAWN

HCB-91 POSTER WITHDRAWN

HCB-92 Is Epigenomic Dysregulation Driving Motor Neuron Vulnerability In ALS? **Professor Catherine Blizzard**

Theme 6
Tissue Biomarkers

BIO-01 Optimization of TDP-43 Seed Amplification Assay as a Diagnostic Tool for ALS and FTD **Dr Ganesh M. Mohite**

BIO-02 Single-molecule profiling of plasma TDP-43 reveals elevated oligomeric species in ALS **Dr Rebecca Saleeb**

BIO-03 Measurement of TDP-43 in neuron-derived extracellular vesicles for ALS identification and longitudinal follow-up in clinical trials **Dr Erez Eitan**

BIO-04 Aptamer-based detection of TDP-43 and FUS across motor control networks identifies distinct pathological trajectories in ALS **Mr Angus Shorthouse**

BIO-05 Development of a Topical Ocular Tracer to Detect TDP-43 During Routine Eye Examinations in ALS and FTD **Dr Julie Pilotte**

BIO-06 Skin and Muscle pTDP-43 Pathology Defines Peripheral TDP-43 Pathology in Amyotrophic Lateral Sclerosis **Dr Takashi Kurashige**

BIO-07 Automated Identification of Gastrointestinal TDP-43 Pathology Using Explainable Deep Learning to Support Peripheral Biomarker Research in ALS **Mr Lukas Jurcaga**

BIO-08 ALS4 Exhibits a TDP-43 Loss-of-Function Cryptic Exon Signature **Mr James Virga**

BIO-09 Non-TDP-43 Co-Pathologies and Cognitive Impairment in ALS: neuropathological correlates **Dr Elisabeth Kasper**

BIO-10 Neuroinflammatory cytokine profiling in post-mortem human ALS motor cortex **Miss Hala Al Masri**

BIO-11 Elemental Dyshomeostasis in ALS Frontal and Motor Cortex Revealed by Bulk and Spatial Metallomics **Mr Kevin Cornell**

BIO-12 Machine Learning Reveals Disease-Specific Protein Aggregate Signatures Across Neurodegenerative Disorders **Mr Matthew McCaskell**

BIO-13 Pre-symptomatic Molecular Alterations in ALS Are Detectable by Skin Raman Spectroscopy **Mr Matthew McCaskell**

BIO-14 The skin microenvironment undergoes molecular, immune and biochemical remodelling prior to symptom onset in ALS **Dr Katie Hanna**

BIO-15 A miRNA signature in the tear fluid of patients with ALS **Dr Antonia F. Demleitner**

BIO-16 Urinary p75ECD reflects lower motor neuron involvement and prognosis in Amyotrophic Lateral Sclerosis **Mr Koen Demaegd**

BIO-17 Cross-matrix evaluation of SHTN1 supports saliva-based biomarker development across the ALS–FTD spectrum **Dr Alexander Parker**

BIO-18 Proteomic Evaluation of Size Exclusion Chromatography and Tetraspanin Immunocapture for Plasma EV Biomarker Discovery in ALS **Miss Nancy Olazagoitia**

BIO-19 Longitudinal profiling of non-coding RNAs as potential biomarkers in ALS **Miss Elena Marie Perez Morrissey**

BIO-20 Peripheral blood mononuclear cell NLRP3 mRNA as a potential marker of disease course in ALS **Dr Denis Shevchuk**

BIO-21 Peripheral cytokine profiles in ALS reveal evolving inflammatory signatures distinct from neuroaxonal injury **Mrs Triparna Roy**

BIO-22 Divergent determinants of CSF and serum TREM2 in ALS: a link with C9orf72 expansion. **Professor Jessica Mandrioli**

BIO-23 Peripheral tissue injury shapes serum p-tau217, whereas brain-derived tau retains Alzheimer's disease specificity **Dr Shuangwu Liu**

BIO-24 From Platelet Discovery to Plasma Translation: Longitudinal Platelet Proteomic and Phosphoproteomic Signatures in ALS **Dr Robert Bowser**

BIO-25 Peptidomic and proteomic analyses identify MYL1 as a novel biomarker candidate for ALS **Dr Besnik Muqaku**

BIO-26 From Neuromuscular Junction Proteomics to Blood Biomarkers in ALS **Dr Roberta Piovesana**

BIO-27 Plasma lipidomics identifies a distinct metabolic signature complementary to neurodegeneration biomarkers in amyotrophic lateral sclerosis **Mr Bernat Bertran-Recasens**

BIO-28 Nutritional depletion and iron dysregulation as independent predictors of ALS progression rate **Dr Matteo Farè**

BIO-29 Fibroblast Growth Factor 21 in ALS **Miss Emily Yang**

BIO-30 Prediagnostic blood levels of creatinine and creatine kinase associated with mortality in ALS: a nationwide cohort study **Mr Jesper Storgaard**

BIO-31 Age-related diagnostic thresholds for serum neurofilaments measured by Ella and Atellica technologies in ALS **Dr Annaick Desmaison**

BIO-32 Examining the Clinical Utility of Neurofilament Light Chain in Evaluation of Amyotrophic Lateral Sclerosis **Mrs Brenna Stearns**

BIO-33 Validation of serum neurofilament light chain as a prognostic biomarker in amyotrophic lateral sclerosis: implications for individualized interpretation and clinical trials **Ms Nine Lukassen**

BIO-34 Baseline Blood Biomarkers Across GMM-Derived Progression Classes in ALS: Associations with Decline and Survival in the PRO-ACT Database **Dr Ahmad Al Khleifat**

BIO-35 Early increases in Neurofilament light chain and Troponin T in ALS mouse models: translational biomarkers for disease monitoring and preclinical drug development **Dr Serena Scozzari**

BIO-36 Multicentre international longitudinal study of neurofilament and ALSFRS-R levels in SOD1-ALS patients receiving Tofersen **Dr Taniya Esmail**

BIO-37 Long-term safety of tofersen: longitudinal CSF WBC and protein trends and individual CSF laboratory and NfL profiles in participants with serious neurologic adverse drug reactions **Dr Adria Martig**

BIO-38 On-Treatment NfL Response Identifies a Two-Year Survival Difference in RESCUE-ALS and Replicates Across Two Independent CNM-Au8 Trials **Kayla Nguyen**

BIO-39 Longitudinal Neurofilament Light Chain Trajectory Is Associated with Survival in ALS: Prespecified Analyses Across Two Independent Cohorts **Dr Marjan Sepassi**

BIO-40 Treatment Benefit of CNM-Au8 in the HEALEY ALS Platform Trial Is Concentrated in Participants with On-Treatment NfL Decline or Stabilization: Concordance and Randomization-Anchored Causal Analyses **Dr Marjan Sepassi**

BIO-41 Identifying biomarkers of C9orf72-ALS/FTD for translation into early diagnosis and measures of efficacy in C9orf72-ALS/FTD clinical trials **Dr David Burrows**

BIO-42 Multimodal Deep Learning Improves Pathological Stratification of ALS Patients With and Without Frontotemporal Dementia **Dr Marta Vallejo**

BIO-43 Powering Genetic Discoveries in ALS: The Target ALS Postmortem Tissue Core **Mrs Amy Easton**

Theme 7
Pre-clinical Therapeutic Strategies

TST-01 Senescent-associated inflammation as a new therapeutic target for ALS/FTD **Professor Manuela Basso**

TST-02 Modulation of the innate immune system in NLS-TDP43 mice via inhibition the mitochondria permeability transition pore **Mrs Sarah Almond**

TST-03 JAKinibs as potential repurposing candidates for Motor Neuron Disease (MND) **Dr Amelia Bryers**

TST-04 POSTER WITHDRAWN

TST-05 Astrocytic X Protein Delays Disease Progression in SOD1G93A mice **Nicolas Boissart**

TST-06 Dysfunctional oligodendrocytes in amyotrophic lateral sclerosis: therapeutic targets and sources of potential biomarkers **Professor Marta Fumagalli**

TST-07 Disease-Modifying Activity of Engineered Human CAR-Treg Candidate BBB-SG01 in a Fast-progressing Mouse Model of ALS **Dr David J. Graber**

TST-08 Microglia-specific miRNA delivery with homing peptides for amyotrophic lateral sclerosis in mice model **Dr Tomoya Terashima**

TST-09 Synergistic action on oxidative stress and inflammation to combat the pathogenesis of amyotrophic lateral sclerosis **Mr Hugo Mourier**

TST-10 LINE-1 retrotransposon activation contributes to motor neuron degeneration in ALS: ENGRAILED-1 as an endogenous regulator and therapeutic candidate **Miss Camille Mayer**

TST-11 Extracellular Vesicle Transcriptomic Signatures as Target-Engagement Biomarkers for Engrailed-1 Therapy in ALS: From Preclinical Models to Human Motor Neurons Using ddPCR **Ms Lucia Friscioni**

TST-12 Therapeutic Efficacy of Human Engrailed-1 (hEN1) Administration in a NEK1-Linked Mouse Model of Amyotrophic Lateral Sclerosis **Dr Stephanie Vargas**

TST-13 Engrailed-1 Regulation of TDP-43 Pathology and Neuroprotection in ALS **Dr Katia Raquel Avila Gutierrez**

TST-14 Leveraging high-throughput transcriptomics (DRUG-seq) to reverse TDP-43 loss of function in stem cell derived motor neurons for ALS drug discovery **Dr Mungo Harvey**

TST-15 Cell-type-resolved spatial transcriptomics reveals NF242-mediated restoration of transcriptional homeostasis in rNLS8 mice **Dr Cristian Droppelmann**

TST-16 Spatial transcriptomic profiling of NF242-mediated mitigation of TDP-43 toxicity in ALS: a methodological overview **Mr Michael Fiorini**

TST-17 Phenotypic screening in ALS motor neurons identifies SIRT1 activation as a genotype-independent neuroprotective strategy **Dr Simon Maksour**

TST-18 Development of therapeutic compounds for the disassembly of TDP-43 aggregates as a disease-modifying treatment for ALS and FTLD **Dr Pauline Philippen**

TST-19 Using engineered intrabodies to study and treat amyotrophic lateral sclerosis **Dr Caitlin O'Shea**

TST-20 AAV-mediated delivery of an intrabody targeting TDP-43 for ALS therapy **Dr Paula Montenegro-Miranda**

TST-21 AAV-mediated delivery of an intrabody targeting TDP-43 for Amyotrophic Lateral Sclerosis therapy **Mr Alessandro Moro**

TST-22 A human-derived anti-TDP-43 intrabody as a novel gene therapy for ALS/FTD **Dr Nikole Zuniga Quiroz**

TST-23 Therapeutic reduction of Ataxin-2 by AAV9 does not improve motor and behavioural phenotypes in TDP-43Q331K mice **Miss Amandeep Kaur**

TST-24 Pharmacological profiling of a repurposed, intranasally delivered autophagy-stimulating compound in the rNLS8 TDP-43 mouse model of motor neuron disease **Dr Ross van de Wetering**

TST-25 Modulation of C9orf72 protein levels as a therapeutic target for C9-ALS/FTD **Dr Natalie Pye**

TST-26 SRSF1 gene inhibition therapy for the treatment of C9orf72-linked ALS/FTD **Miss Chloe Moutin**

TST-27 CDK12 Inhibiting Compounds reduce RNA Foci Burden in iPSC-derived Motor Neurone Models of C9orf72 Amyotrophic Lateral Sclerosis. **Miss Daisy Stringfellow**

TST-28 Targeting MALAT1 lncRNA to modulate autophagy and myogenesis in iPSC-derived muscle cells: a nano-nuclear strategy for C9orf72-ALS **Dr Eleonora Giagnorio**

TST-29 Multiple-miRNA-targeted therapy designed by chemical reaction network computational analysis and exploiting biocompatible nano vectors technologies **Professor Marco Milanese**

TST-30 Targeting microRNA-129 as a therapeutic strategy and biomarker in amyotrophic lateral sclerosis **Dr Francesca Sironi**

TST-31 Preclinical development of antisense oligonucleotide TRCN-1023 to restore UNC13A function in people living with Amyotrophic Lateral Sclerosis **Ms Terry Fang**

TST-32 Use of nonclinical PK/PD data and translational modeling to support selection of human dose and dosing regimen for TRCN-1023 in People living with ALS **Dr Marjie Hard**

TST-33 Development of LTX-002, a novel ASO, for the treatment of ALS **Dr Laura Heckman**

TST-34 Development of Antisense Oligonucleotides Targeting RAB27B for Axonal Regeneration in ALS **Ms Delenn Eddy**

TST-35 Development of antisense oligonucleotides to restore axonal health in sporadic amyotrophic lateral sclerosis **Dr Jessica Mantegna**

TST-36 Development of a systemic delivered antisense oligonucleotide targeting ataxin-2 to treat ALS **Miss Liouba Le Roux**

TST-37 A loop-mimetic SOD1 antigen elicits antibodies to a mutant-associated conformational epitope and ameliorates disease in SOD1G93A mice **Professor Stanislav Engel**

TST-38 Structure-guided fragment growth at the Trp33 site of SOD1 for development of the first PROTAC targeting SOD1 **Miss Sarah Linares**

TST-39 Advanced base and prime editing strategies to correct common ALS-causing SOD1 mutations **Dr Katharina Meijboom**

TST-40 AVB-203: Intravenous AAV-miRNA achieves remarkable SOD1 knockdown with extended survival in SOD1G93A transgenic mice. **Professor Christopher E Shaw**

TST-41 Introducing Borsantrazole: A trifunctional boron-based pyrazole increases survival, delays disease onset, and prevents ALS-induced cachexia in a hSOD1 model of Amyotrophic Lateral Sclerosis **Dr Geoffrey Tranmer**

TST-42 Discovery of neurofilament proteoforms in a familial SOD1 ALS model correlating with the efficacy of Borsantrazole **Dr Nitesh Sanghai**

TST-43 Phenotypic discovery and preclinical development of mitochondrial-targeted therapeutics for ALS **Dr Neelam Shahani**

TST-44 POSTER WITHDRAWN

TST-45 RXR-driven molecular dysregulation drives amyotrophic lateral sclerosis and is rescued by bexarotene **Dr Rachel Kline**

TST-46 Design and Development of Sigma-1 Receptor Analogs **Dr Richard Smith**

TST-47 Characterisation of the in vitro and in vivo pharmacology of NRG5051, a novel inhibitor of the mPTP acting via NLRX1 **Dr Ovadia Lazari**

TST-48 Discovery and clinical development of NRG5051, a novel therapeutic targeting NLRX1 for the treatment of ALS **Dr Richard Rutter**

TST-49 POSTER WITHDRAWN

TST-50 Preclinical Evaluation of an inhibitor of Exportin-1 (XPO1) as a potential therapeutic strategy in Amyotrophic Lateral Sclerosis **Dr Arianna Giani**

TST-51 Astrocyte to Neuron Reprogramming Enables Circuit Repair and Functional Rescue in ALS **Dr Hussein Ghazale**

TST-52 Fusion-Mediated Restoration of Neuronal Homeostasis Delays Disease Progression in Amyotrophic Lateral Sclerosis **Dr Do-Yeon Lee**

TST-53 Halofuginone-Based Combination Therapy Demonstrates Synergistic Anti-Fibrotic and Neuroprotective Effects in SOD1-G93A Models of ALS **Dr Do-Yeon Lee**

TST-54 A multisystem and multitarget therapeutic approach to hamper amyotrophic lateral sclerosis (multitreatals) **Dr Laura Pasetto**

TST-55 CNS-Specific Disruption of Neuregulin Signaling Alters Parvalbumin Neurons in ALS in a Sex-Dependent Manner **Professor Fei Song**

TST-56 POSTER WITHDRAWN

TST-57 POSTER WITHDRAWN

TST-58 Laser-Activated Nanodroplet Enabled Spinal Motor Neuron Gene Therapy **Dr Nicholas Boulis**

TST-59 sAXL biomarker levels reflect ADAM10/17 activity and define the optimal therapeutic window for sheddase inhibition in ALS **Dr Marco Peviani**

TST-60 Machine learning-enabled advancement of ALS-1 from target discovery to therapeutic development **Ms Eva Czirr**

TST-61 The Charcot Institute: A New Translational Research Paradigm to Accelerate Therapeutic Development in ALS **Mrs Marguerite Jamet**

TST-62 CXCR4: an early injury response marker at the NMJ and a target for functional recovery in ALS **Ms Chiara Baggio**

TST-63 Ginsenoside Compound K as a muscle-targeted therapeutic strategy in neuromuscular disorders **Dr Cassandra Margotta**

TST-64 Preclinical characterization of prosetin, a novel, CNS-penetrant MAP4K inhibitor developed for the treatment of ALS **Dr Dan Stettler**

TST-65 POSTER WITHDRAWN

TST-66 POSTER WITHDRAWN

Theme 8
Clinical Imaging and Electrophysiology

IMG-01 Diagnostic performance of the split hand index: results from an international multi-centre study **Dr James Alix**

IMG-02 A revised motor unit number estimate detects presymptomatic motor neuron loss in ALS **Dr James Bashford**

IMG-03 A comparison of the efficacy of some electrophysiological tools for motor unit number estimation (MUNE) in normal subjects and ALS patients **Dr Emilio Geijo-Barrientos**

IMG-04 Diagnostic Accuracy of Upper and Lower Limb CMAP Scan-Derived MUNE Combined with Upper Limb Nerve Excitability in Amyotrophic Lateral Sclerosis **Ms Merel Flinsenberg**

IMG-05 Longitudinal Motor Unit Number Index Measurements Reveal Early Lower Motor Neuron Dysfunction and Correlate with Clinical Phenotype in Amyotrophic Lateral Sclerosis **Mrs Laura Federspieler**

IMG-06 Longitudinal Assessment of Motor Unit Number Index and Biomarkers of Lower Motor Neuron Degeneration in Patients with Amyotrophic Lateral Sclerosis **Dr Annekathrin Rödiger**

IMG-07 Introducing home-based high-density surface electromyography as a feasible measure of motor neuron health in ALS **Miss Sterling Farrant-Barnes**

IMG-08 Qualification program for harmonised M-scan implementation: a multi-centre clinical trial experience **Mrs Isabelle Busman**

IMG-09 Aperiodic EEG Biomarker of P300 BCI Readiness in ALS: A Passive Session-Level Cortical Excitability Index **Miss Khanh-Dung Tran (virtual only)**

IMG-10 Quantifying parameter uncertainty to enhance the interpretation of nerve excitability properties in human motor nerve fibers in vivo **Dr Boudewijn THM Sleutjes**

IMG-11 Motor unit coherence as a non-invasive biomarker of upper and lower motor neurone integrity in ALS **Dr Matheus Pinto**

IMG-12 Inhibition-facilitation imbalance in the motor cortex in Japanese patients with ALS **Dr Mana Higashihara**

IMG-13 Afferent Dysfunction and Its Contribution to Network Disorganization in Amyotrophic Lateral Sclerosis **Professor Véronique Marchand-Pauvert**

IMG-14 Corticospinal Excitability and Intracortical Modulation of the Diaphragmatic Motor Cortex in patients with ALS: a multicenter cross-sectional study **Mr Pedro Soares Freitas Neto**

IMG-15 Relationship Between Diaphragmatic Motor Cortex Excitability and Respiratory Function in Individuals With Amyotrophic Lateral Sclerosis: a multicenter cross-sectional study **Mr Pedro Soares Freitas Neto**

IMG-16 Quantifying Neural Excitation-Inhibition Balance in ALS using Resting-State EEG **Ms Iris A Bastmeijer**

IMG-17 EEG Connectivity Metrics Reveal Clinically Relevant Network Alterations in Amyotrophic Lateral Sclerosis **Mrs Ana De Nadai**

IMG-18 Investigating auditory mismatch negativity in ALS **Ms Marit Boxum**

IMG-19 Resting-State EEG Microstate Dynamics Across Neuropsychological Phenotypes in Amyotrophic Lateral Sclerosis **Dr Marjorie Metzger**

IMG-20 Posterior alpha modulation and peak alpha frequency are unaffected in ALS: A sensor-space EEG study **Dr Narin Suleyman**

IMG-21 Frontotemporal alpha power is reduced in ALS but alpha modulation remains intact: A source-reconstructed high-density resting-state EEG study **Dr Narin Suleyman**

IMG-22 Neurofilament Light Chain Associations with Functional Connectivity in Amyotrophic Lateral Sclerosis Using Resting-State fMRI **Miss Ilsa Khan**

IMG-23 Longitudinal Brain Functional Connectivity Changes in patients with ALS Using Resting-State BOLD fMRI **Miss Ilsa Khan**

IMG-24 Determinants of longitudinal disease propagation in ALS **Mr Boaz Kalkhoven**

IMG-25 Towards a structural network mechanism underlying cognitive impairment in ALS **Ms Annebelle Michielsen**

IMG-26 Characterising the progression of motor system degeneration in Amyotrophic Lateral Sclerosis using longitudinal diffusion weighted brain imaging **Dr Corey Ratcliffe**

IMG-27 Multi-dimensional assessm ent of corticospinal white-matter integrity reflects disease progression in amyotrophic lateral sclerosis **Dr Sicong Tu**

IMG-28 Longitudinal progression of enlarged perivascular space in ALS patients and correlation with clinical disease progression **Dr Sung-Ju Hsueh**

IMG-29 Cholinergic basal forebrain microstructural damage in early-stage patients with amyotrophic lateral sclerosis: relation with neuroinflammation and cognitive deficits **Dr Shuangwu Liu**

IMG-30 Free water and quantitative susceptibility imaging reveal selective substantia nigra damage in amyotrophic lateral sclerosis patients **Dr Shuangwu Liu**

IMG-31 Cortical and white matter microstructural degeneration in ALS and ALS symptoms: Insight into pseudobulbar affect **Mr Christian Holm Steenkjaer**

IMG-32 Multimodal structural imaging correlates of DNA methylation-based biological age acceleration in amyotrophic lateral sclerosis: a prospective, multicentre study **Dr Daniel Ta**

IMG-33 Fasciculation Detection Using Whole-Body Muscle MRI in ALS: Preliminary Results of an Ongoing Study **Miss Karleen Oonk**

IMG-34 An Exploratory Analysis of the Relationship Between Self-Supervised Deep Learning Embeddings of Brain MRI and Functional Impairment in ALS **Dr Muhammad Abeer Irfan**

IMG-35 A cortical-surface deep-learning classifier (“GeoMND”) detects ALS and generalises across unseen scanners and populations in the Asia-Pacific MND Imaging Initiative (AMII) **Dr Thomas Shaw**

IMG-36 Association between motor cortex grey matter loss and inability to control an implanted brain-computer interface in ALS **Dr Mathijs Raemaekers**

IMG-37 Exploring gene expression and neurotransmitter variation underlying cerebral atrophy patterns of ALS subtypes **Mr Justusvan Nispen tot Sevenaer**

IMG-38 Hierarchical Excitation-Inhibition Imbalance and Sex-Specific Vulnerability in Amyotrophic Lateral Sclerosis: A Multimodal Imaging-Transcriptomic Study **Dr Jixin Luan**

IMG-39 Integrating Neuroimaging Transcriptomics and Single-Cell Sequencing Reveals Cortical Vulnerability and Novel Therapeutic Targets in Amyotrophic Lateral Sclerosis **Dr Jixin Luan**

IMG-40 Brain metabolic correlates of plasma biomarkers in Amyotrophic Lateral Sclerosis **Dr Sara Cabras**

IMG-41 Multimodal MRI Reveals Convergent Imaging Signatures Consistent with Mineral Dyshomeostasis and Neuroaxonal Degeneration in Amyotrophic Lateral Sclerosis: A Systematic Review and Meta-analysis **Dr Minoo Sharbafshaaer**

IMG-42 Identifying Amyotrophic Lateral Sclerosis with Voting Network of a Foreground Detection Assisted Machine Learning Method using B-mode Ultrasound Videos **Professor Emma Hodson-Tole**

IMG-43 Electrophysiological Characteristics for Spinal and Bulbar Muscular Atrophy and Differential Diagnosis from amyotrophic lateral sclerosis **Dr Kang-Yang Jih**

IMG-44 Reduced Sensory Network Connectivity Reflects Sensory Neuron Dysfunction in Spinal and Bulbar Muscular Atrophy **Dr Jin-Sung Park**

IMG-45 Differentiating behavioural variant frontotemporal dementia from misdiagnoses by deriving atrophy through deep-learning-based CT to MRI synthesis **Dr Joshua Flavell**

IMG-46 Factors associated with false-positive routine radiology reporting of behavioural variant frontotemporal dementia on ^{1}F-FDG PET **Dr Joshua Flavell**

Theme 9
Clinical Trials and Trial Design

CLT-01 PrimeC in ALS: Integrated Clinical and Biomarker Evidence Demonstrating Target Engagement and Supporting Global Phase 3 Development **Dr Merit Cudkowicz**

CLT-02 Academia-industry collaborative programs support and accelerate seamless ALS drug development: Healey ALS MyMatch and HEALEY ALS Platform Trial experiences **Dr Merit Cudkowicz**

CLT-03 Healey ALS MyMatch: Program overview and Latest Trial Updates **Dr Suma Babu**

CLT-04 The HEALEY ALS Platform Trial Next Generation Design: Optimized master protocol for Regimen I and beyond **Dr Lori B Chibnik**

CLT-05 ALS Therapy Evaluation Framework: Selection of Investigational Products for the HEALEY ALS Platform Trial and Healey ALS MyMatch Program **Ms Kristin Drake**

CLT-06 ALS Scholars in Therapeutics: Developing the Next Generation of ALS Research Leaders **Ms Kristin Drake**

CLT-07 Enhancing Enrollment Through Continuous Process Improvement - The HEALEY ALS Platform Trial Experience **Ms Marianne Chase**

CLT-08 Optimizing Site Activation Through Collaboration and Experience in the HEALEY ALS Platform Trial **Ms Lia Tamburello**

CLT-09 Design and Enrollment Rate in Regimen I of the HEALEY ALS Platform Trial: Next Generation - Testing NUZ-001 **Dr James Berry**

CLT-10 Accelerating ALS Clinical Trials Through a Perpetual Platform Trial: Innovation Across the Data Lifecycle **Ms Lindsay Heyd**

CLT-11 Phase 2a Trial of Intranasal Foralumab - BANYAN, a Healey ALS MyMatch Trial **Ms Lindsay Heyd**

CLT-12 Accelerating Clinical Trial Start-Up in ALS: Insights from ongoing INARC Global trial start-up Survey **Mr Tommy Bunte**

CLT-13 Nationwide Assessment of Clinical Trial Readiness for ALS in Japan **Professor Yuishin Izumi**

CLT-14 Screening Platform for Early Eligibility Detection (SPEED) in ALS Clinical Trials **Dr Jennifer Morganroth**

CLT-15 Financing Adaptive Platform Trials Through a Royalty-Based Investment Model: A Novel Framework to Accelerate ALS Drug Development **Andrew W Lo**

CLT-16 The Importance of Accurate Clinical Trial Registries for People Living With ALS **Dr Nadia Sethi**

CLT-17 Toward Standardized Walking Bout Definitions for Digital Mobility Measures in ALS and Related Disorders **Dr Joshua Rubin Abrams**

CLT-18 Digital endpoints for remote monitoring of disease progression in amyotrophic lateral sclerosis **Ms C M Botman**

CLT-19 Characterising Wrist and Hip Actigraphy in ALS; findings from the Precision ALS TechnicALS study **Dr Marc T J Elliott**

CLT-20 Consensus Priorities for Advancing Actigraphy-Derived Digital Outcome Measures in Amyotrophic Lateral Sclerosis Clinical Trials **Dr Christine Guo**

CLT-21 Sensitive Detection of Functional Decline in ALS: Multimodal Digital Biomarkers and Time-to-Event Analysis for Clinical Trial Efficiency **Dr David Suendermann-Oeft**

CLT-22 Automated Digital Speech Metrics in ALS: Phenotypic Stratification and High-Resolution Progression Tracking **Dr Tabea Thies**

CLT-23 At-Home Telespirometry Identifies Baseline Erect Slow Vital Capacity (eSVC) at ≤80%-Predicted as a Pivotal Benchmark Separating Rapid From Less Rapid Decline in eSVC, Supine SVC and Amyotrophic Lateral Sclerosis Functional Rating Scale-Revised Score in Observational Study (NCT05106569) **Dr Eufrosina Young**

CLT-24 Validation of the Self-Reported ALS Functional Rating Scale-Revised in the ALL ALS Study **Dr Katherine Burke**

CLT-25 PROQuALS: A new Patient Reported Outcome Measure for Quality of life in Amyotrophic Lateral Sclerosis **Dr Esther Hobson**

CLT-26 The EQ-5D-5L in Amyotrophic Lateral Sclerosis: an international longitudinal exploration as part of ALS-CarE **Dr Robert McFarlane**

CLT-27 Reliability, validity, and usability of hand grip strength: comparing supervised and unsupervised performance across four dynamometers in neuromuscular disorders **Miss Doreen Lemmen**

CLT-28 Quantitative ALS: Development of a Novel, Physician-reported, ALS Outcome Measure **Mr Pola Gaid**

CLT-29 Consistency of Functional-Loss Predictions Across Related ALSFRS-R Outcomes in PRO-ACT **Mr Dhruv Bhatnagar**

CLT-30 POSTER WITHDRAWN

CLT-31 Implementation and Analysis for Minimally Important Difference (MID) for the ALSFRS-R in the ASSESS ALL ALS study **Dr Praveena Mohan**

CLT-32 Functionally-Adjusted Life Years **Dr Eric Macklin**

CLT-33 An appraisal of statistical methods for handling concomitant care when analyzing survival in clinical trials: what is the clinical question of interest? **Mr Jordi van Unnik**

CLT-34 Assessing the Impact of Pre-Analytical Variables on Neurofilament Light Chain Stability: An EXPERTS-ALS Validation Study **Miss Alice Ann Donaghue**

CLT-35 Powering EXPERTS-ALS: A GCP-compliant NfL laboratory for a unique adaptive Bayesian platform trial **Dr Monica Passoni**

CLT-36 Designing ALS Trials using Serum Neurofilament Light Chain as an Efficacy Outcome: Operational Evidence from the HEALEY ALS Platform Trial **Mr Giorgio Paulon**

CLT-37 Intraindividual fluctuations of neurofilament light chain in amyotrophic lateral sclerosis: implications for repeated measurements **Mr Philipp Schmitt**

CLT-38 TRICALS risk score augments but cannot replace neurofilament as a prognostic biomarker in ALS **Dr Ahmad Al Khleifat**

CLT-39 Riluzole in the Era of Personalised Medicine: Towards Precision Therapy for Amyotrophic Lateral Sclerosis **Dr Ahmad Al Khleifat**

CLT-40 Enhancing the Prognostic Value of Plasma Neurofilament Light in ALS Clinical Trials Using Digital Twins **Mr Tanmay Shankar**

CLT-41 Determinants of Participation and Perceived Meaningful Benefit in ALS Clinical Trials: Towards a More Patient-Centric Trial Design **Miss Famke Cosijn**

CLT-42 Attitudes and experiences of participants in the Motor Neuron Disease Systematic Multi-Arm Adaptive Randomised Trial (MND-SMART) **Mr Isaac Chau**

CLT-43 Evaluating Clinical Comparability and Engagement in On-site vs. Remote Participants: Findings from the ASSESS ALL ALS Study **Dr Praveena Mohan**

CLT-44 Evaluating Decentralized Research Models in ALS/MND: Real-World Experience from Hybrid and Remote Cohorts **Mr Alexander Sherman**

CLT-45 A Causal Inference Analysis to Assess the Effects of Statins on Survival in ALS Using Real World Data **Ms Willow Butler**

CLT-46 LAUNCH ALS: A First-in-Human, Ascending Dose Trial examining Intrathecal Administration of TRCN-1023, an Antisense Oligonucleotide Targeting UNC13A Mis-splicing, in People Living with ALS **Dr Weiqi Chen**

CLT-47 FUNCTION ALS: A randomized, double-blind, placebo-controlled, Phase 1 / 2 trial evaluating the safety, tolerability, pharmacokinetics, pharmacodynamics, and exploratory efficacy of ascending doses of TRCN-1023 administered by intrathecal injections to adult people living with ALS **Dr Irina Antonijevic**

CLT-48 A multi-asset master open-label extension protocol for patients with amyotrophic lateral sclerosis (L0U-MC-OLMP): design and first intervention-specific appendix evaluating an UNC13A-targeted splice-switching oligonucleotide **Dr Nick Ziogas**

CLT-49 EPISOD1: A Phase 1/2, Multicenter Study to Evaluate the Safety, Tolerability, and Exploratory Efficacy of Intrathecally Administered Gene Therapy AMT-162 in Patients with SOD1 Amyotrophic Lateral Sclerosis (SOD1-ALS) **Professor Peter Andersen**

CLT-50 An update from GOALS, a first-in-human phase 1b/2 trial of ALN-SOD, an intrathecally-administered small interfering RNA targeting SOD1, in symptomatic SOD1-ALS **Dr Angela Genge**

CLT-51 AP101-03: Design of a Phase 3 Confirmatory Trial of AP-101, a Human Antibody Targeting Misfolded SOD1, in Sporadic and SOD1-Associated ALS **Dr Angela Genge**

CLT-52 Results from PRO-101, a Phase 1b study evaluating the safety, tolerability, pharmacokinetics, and pharmacodynamics of prosetin in participants with ALS **Ms Erin Fleming**

CLT-53 LUMINA: Early Cohort Data from the Phase 1 Study of AMX0114 in ALS **Dr Sabrina Paganoni**

CLT-54 NeurALS (LTX-002-101), a clinical trial of an ASO for the treatment of sporadic or familial forms of ALS **Dr Lawrence Severt**

CLT-55 Targeting Proteostasis in ALS: Mechanism of Action Insights from Preclinical Studies and Phase 1b Clinical Evidence for NUZ-001 **Dr Martin Engel**

CLT-56 Advancing brelgometon, a small-molecule positive modulator of the neurotrophic HGF system, from preclinical proof-of-mechanism through clinical development for ALS **Dr Kevin Church**

CLT-57 From Bench to Bedside: Novel Retinal Tracer to Detect TDP-43 in ALS and Enable an AI-driven Biomarker Platform **Dr Julie Pilotte**

CLT-58 Effects of combined use of edaravone and ultra-high dose methylcobalamin on functional decline and long-term outcomes of ALS **Professor Ryuji Kaji**

CLT-59 Long-term outcomes of ultra-high-dose methylcobalamin in ALS: JETALS and its open-label extension **Dr Koji Fujita**

CLT-60 Association of Edaravone Oral Suspension With Improved Progression-Free Survival in Patients With Amyotrophic Lateral Sclerosis: A Propensity Score-Matched Analysis of the Optum Claims Database **Miss Malgorzata Ciepielewska**

CLT-61 Slowing of Functional Decline with Pridopidine Through Week 48 Versus Propensity-Score-Weighted PRO-ACT Controls **Dr Bernd-Jan Sanson**

CLT-62 Innate Immune Regulation of Slowly Progressive ALS with NP001 Suggests an Immunopathogenic Form of Disease: Modeling Phase 2 Data into A Phase 3 Rationale **Dr Michael McGrath**

CLT-63 The CALM Study: Safety, Tolerability, and Preliminary Efficacy of Multi-site Direct Current Stimulation for Reducing Motor Neuron Excitability in ALS **Dr Courtney McIlduff**

CLT-64 Transcranial Pulse Stimulation (TPS) in amyotrophic lateral sclerosis: preliminary findings on cortical excitability modulation **Mr Sergio Vidal Notari**

CLT-65 Mapping the Full Pathological Cascade in ALS: Mechanistic Rationale for a 4-Biomarker Tetrad (LBP, oxLDL, 4-HNE, NfL) in the ALSTARS Trial of COYA 302 **Dr Tyrell Simkins**

CLT-66 A multi-level biological framework for classifying therapeutic targets in ALS trials **Ms Sophie Plasmans**

CLT-67 Benchmarking clinical efficacy in ALS: a systematic review and network meta-analysis of randomized disease-modifying clinical trials **Ms Sophie Plasmans**

CLT-68 Silence ALS Updates: nL-CHCHD-001 for CHCHD10-ALS **Dr Olivia Rifai**

CLT-69 Icerguastat in bulbar-onset ALS: an exploratory phase 2 study of safety and biomarkers **Dr Maria Vizziello**

Theme 10
Disease Stratification and Phenotyping

DSP-01 Reduced step cadence and altered activity patterns precede symptom onset in C9orf72 expansion carriers **Dr Kerala Adams-Carr**

DSP-02 Sleep measurement using wrist-worn actigraphy in asymptomatic carriers of C9orf72 hexanucleotide repeat expansion **Miss Isabela Ramanath**

DSP-03 Neurological Soft Sign Burden and Cognition-Associated Sensory Integration in Unaffected Familial ALS Relatives: An Endophenotyping Study **Dr Ciara O'Donoghue**

DSP-04 Evaluating the feasibility of remote capillary measurement of neurofilament light chain in people at risk of genetic ALS **Dr Cory Holdom**

DSP-05 A premotor disease signature for ALS: current state and future development of the premodiALS study **Dr Laura Tzeplaeff**

DSP-06 Flail Limb Syndromes **Professor Mark Bromberg**

DSP-07 DRUMS: A Treatable Mimic of Flail-Arm ALS **Dr Vincent Fabry**

DSP-08 Motor neuron diseases and myasthenia gravis overlap syndrome: Clinical correlates and possible pathogenetic interplay **Dr Antonio Petrucci**

DSP-09 Clinicopathological correlation of Motor Neuron Disease: A 10-year retrospective case series **Mr Isaac Chau**

DSP-10 Early Diagnostic Value of Muscle Ultrasound Fasciculation Detection in Patients with Clinically Isolated Monomelic Lower Motor Neuron Involvement **Mr Nan Hu**

DSP-11 Isolated fasciculations without weakness as a presenting symptom of Amyotrophic Lateral Sclerosis **Miguel Santos**

DSP-12 The ALS-OPM Classification Identifies Distinct Trajectories of Proximal Amyotrophic Arm-Onset Phenotypes **Dr André Maier**

DSP-13 Prognostic phenotyping in ALS: real-world validation and inter-rater reliability of the revised OPM classification **Mr KacperMazurkiewicz**

DSP-14 A Patient Network Approach to Characterizing Molecular Heterogeneity and Subtypes in Amyotrophic Lateral Sclerosis **Ms Judy Liang**

DSP-15 Sexual Dimorphism In Amyotrophic Lateral Sclerosis Phenotypes From The Canadian Neuromuscular Disease Registry **Dr Gerald Pfeffer**

DSP-16 In for the Long Haul: Characteristics of a Canadian Cohort of long-survivors of Amyotrophic Lateral Sclerosis **Dr Colleen O'Connell**

DSP-17 Natural History of ALS in India and Predictors of Disease Progression and Survival: A Prospective Longitudinal Cohort Study **Dr Muddasu Suhasini Keerthipriya**

DSP-18 Stratifying large heterogenous cohorts of ALS patients using the D50 ALS analysis cube **Professor Julian Grosskreutz**

DSP-19 Disease Aggressiveness Shapes the Relative Timing of Clinical Milestones in ALS: Insights from the D50 Disease Progression Model **Dr Sophia Lammers**

DSP-20 Onset site-specific Subscore Decline of the ALSFRS-R within a three-dimensional Analysis Cube in Early Disease Phases **Ms Isabelle Buchholz**

DSP-21 The Rasch-Overall ALS Disability Scale (ROADS): Longitudinal Characteristics and Survival Predictions **Dr Christina Fournier**

DSP-22 A two-biomarker approach reveals distinct biological signatures across the OPM classification in amyotrophic lateral sclerosis: complementary associations of serum cardiac troponin T and neurofilament light chain **Ms Sarah Bernsen**

DSP-23 Exploring Clinical and Neurophysiological Heterogeneity in Amyotrophic Lateral Sclerosis: An Exploratory Pilot Study of Correlational Patterns and Data-Driven Clusters **Dr Corrado Cabona**

DSP-24 Linking clinical and laboratory electrophysiology studies for patient-stratified research in MND **Dr Daniel Cabezas De La Fuente**

DSP-25 Disentangling Motor and Cognitive Biology in ALS: NfL and GFAP as Complementary Biomarker Signals **Dr Andrea Giordano**

DSP-26 Analytical Performance Characterization and Comparability of Blood Neurofilament Light Chain Across Diagnostic Platforms and ALS Cohorts **Dr Nathalie Le Bastard**

DSP-27 Extracellular vesicle enrichment reveals proteomic changes partially distinct from whole cerebrospinal fluid in amyotrophic lateral sclerosis **Dr Elizabeth Dellar**

DSP-28 Circulating protein profiling identifies prognostic biomarkers in amyotrophic lateral sclerosis **Mrs Hadar Klimovski**

DSP-29 miR-125 in the cerebrospinal fluid is a prognostic marker in amyotrophic lateral sclerosis **Dr Iddo Magen**

DSP-30 Serum MicroRNAs as Prognostic Biomarkers in Amyotrophic Lateral Sclerosis: Evaluating Machine Learning-Based Survival Prediction Potential **Miss Carolien van der Hoeven**

DSP-31 POSTER WITHDRAWN

DSP-32 An interpretable survival prediction model for MND/ALS using routine clinical features and ALSFRS-R progression **Dr Lyndal Henden**

DSP-33 Machine learning-based survival prediction in ALS using integrated clinical and genetic data **Dr Daniel Borrego Hernandez**

DSP-34 Healthcare Resource Utilization Following Early vs Late Edaravone Initiation in Amyotrophic Lateral Sclerosis: A Real-World Claims Analysis **Miss Malgorzata Ciepielewska**

DSP-35 Blood phosphorylated tau biomarkers identify lower motor neuron and muscle involvement in amyotrophic lateral sclerosis **Mr Bernat Bertran-Recasens**

DSP-36 Metabolic phenotypes identified by hierarchical clustering are associated with survival in amyotrophic lateral sclerosis **Mr Juan Ignacio López-Carbonero**

DSP-37 Evaluating the Impact of Blood Lipids on Disease Progression and Survival in People Living with Amyotrophic Lateral Sclerosis: A Systematic Review and GRADE Analysis **Ms Amber Sewell-Green**

DSP-38 Interaction of cholesterol, nutritional and immune status in the prognosis of ALS patients: an observational cohort study **Dr Elisabetta Zucchi**

DSP-39 Targeted proteomics before and after Riluzole initiation in newly diagnosed ALS patients **Mr Elias Projahn**

DSP-40 ERVK activity in CD8+ T cell immune cell compartment in patients with ALS **Professor Renée Douville**

DSP-41 T Cell Dynamics and Their Recognition of TDP-43 Proteinopathy Induced Cryptic Peptides in ALS **Mr Samuel Levy**

DSP-42 Next-generation Seed-Amplification-Assay biomarker uncover the extensive impact of alpha-synuclein co-pathology in amyotrophic lateral sclerosis **Mr Stefan Bräuer**

DSP-43 Sex-related neuroinflammatory and astrocytic responses in amyotrophic lateral sclerosis: evidence from clinical cohorts and TDP-43 N390D mouse model **Dr Shuangwu Liu**

DSP-44 C9orf72 Hexanucleotide Repeat Expansion Is Associated with Increased Risk of Autoimmune Disease And Tumours **Dr Ana Merchán Cabanillas**

DSP-45 Cellular Transcriptional Programs Underlying Vulnerability to Whole-Brain Neurodegeneration and Clinical Heterogeneity in Amyotrophic Lateral Sclerosis **Ms Emily Cui**

DSP-46 Proteomic analysis of fibroblasts from monozygotic twins carrying TARDBP mutations and discordant for age of onset, reveals significant impairment of protein quality control systems **Professor Viviana Greco**

DSP-47 In-depth mitochondrial phenotyping in Motor neurone disease (MND) patient-derived cells to translate into therapeutic approaches **Miss Laura Ellis**

DSP-48 Phosphorylation-specific refinement of FUS pathology in ALS **Dr Helena Motaln**

DSP-49 Quantifying muscle performance fatigability in ALS during a sustained walking task **Dr Katey Burke**

DSP-50 Multimodal assessment of early bulbar dysfunction in ALS: preliminary results from the MIMOSA Study **Dr Francesco Ginanni**

DSP-51 Pupillometry as a Behavioural Assay of Hypothalamic Dysfunction in ALS **Ms Emmaley Hunter**

DSP-52 The ALS-FVC Index: Postural Fall in Vital Capacity Uncovers Occult Diaphragmatic Dysfunction and Predicts Survival in ALS Patients with Normal Upright FVC **Dr Muhannad Seyam**

DSP-53 Respiratory phenotypes for stratifying and predicting survival in ALS: A multinational external validation study **Dr Muhannad Seyam**

DSP-54 Multimodal Assessment of Speech, Respiratory, Orofacial and Limb Motor Function in ALS Patients: An Update from the Target ALS Global Natural History Study **Dr David Suendermann-Oeft**

DSP-55 Development of a diagnosis-agnostic Communication Functional Stratification Framework for expressive communication capacity **Ms Zoe Lalji**

DSP-56 Longitudinal Evaluation of Remote Active Tasks in ALS Using Digital Health Technologies **Dr Narghes Calcagno**

DSP-57 Tracking Disease Progression in ALS with Wearable Digital Gait Measures **Dr Narghes Calcagno**

DSP-58 Portable digital biomarkers of motor dysfunction aross the FTD-ALS spectrum **Miss Luna Nordenstrom**

DSP-59 Wearable digital gait metrics capture multidimensional ambulatory decline in ALS **Dr Marcin Strączkiewicz**

DSP-60 Brief at-home exercises quantify lower limb impairment and progression in ALS **Dr Marcin Strączkiewicz**

DSP-61 Remote Digital Speech Biomarkers Track Bulbar and Respiratory Impairment in ALS **Dr Tabea Thies**

DSP-62 Passive nocturnal monitoring captures autonomic markers of disease progression in Amyotrophic Lateral Sclerosis **Dr Amie Wallman-Jones**

DSP-63 The Oura ring in FTD-ALS **Miss Amelia Blesius**

DSP-64 Explainable ALS Severity Prediction using Temporal Knowledge Graph Embeddings **Dr Erfan Amirzadeh Shams**

DSP-65 From Clinical Notes to ALSFRS-R: Validation of an AI-Based Extraction System in ALS **Dr Matteo Farè**

DSP-66 Machine learning classification of amyotrophic lateral sclerosis using accelerometer-derived physical behaviour **Miss Nina Mitic**

DSP-67 Improving ALS Disease Progression Modelling Through Deep Learning-Based Imputation of PRO-ACT Data **Mr Mikołaj Stańczak**

DSP-68 NeuroDecomp: Mapping ALS Neurodegeneration with Interpretable MRI-Based Artificial Intelligence **Dr Pedram Parnianpour**

DSP-69 Patient specific diffusion MRI profiles reflect pattern of functional decline in amyotrophic lateral sclerosis **Dr Sicong Tu**

DSP-70 Individual-level prediction of neurodegeneration-based ALS subtype using MRI **Miss Pauline Van Lieshout**

DSP-71 Developing Translatable Blood-Based ALS Molecular Subtypes via Prior Knowledge-Integrated Hierarchical Clustering and a Sparse Group Lasso Feature Selection Framework **Dr Heather Marriott**

DSP-72 Mapping the non-coding RNA landscape in ALS and FTD across multiple biofluids and skin **Miss Giorgia Farinazzo**

DSP-73 Multiomic profiling of plasma-derived extracellular vesicles identifies molecular signatures associated with Amyotrophic Lateral Sclerosis diagnosis and disease progression **Dr Mónica Povedano**

DSP-74 Metabolic signatures of ferritin and TDP-43 co-pathology provide a mechanistic basis for MRI stratified therapeutic approaches in ALS **Dr Holly Spence**

DSP-75 Stage-specific neuronal cell-cycle re-entry stratifies clinical trajectories and vulnerability in ALS **Professor Roger Sher**

DSP-76 CURE-ND4ALS: A Novel Consortium for Translational ALS Research in Europe **Professor Andreas Hermann**

DSP-77 The Accelerating Medicines Partnership® in Amyotrophic Lateral Sclerosis (AMP® ALS) **Dr Amy Tsou**

DSP-78 Comprehensive Analysis Platform to Understand, Remedy, and Eliminate Amyotrophic Lateral Sclerosis (CAPTURE ALS): A Canadian Open-Science Research Platform for ALS **Mr Saswat Sahoo**

DSP-79 POSTER WITHDRAWN

DSP-80 POSTER WITHDRAWN

Theme 11
Cognitive and Psychological Assessment and Support

COG-01 Sleep and motor activity alterations in presymptomatic C9orf72 gene mutation carrier **Professor Dorothée Lulé**

COG-02 The role of cognitive reserve in C9ORF72-related Amyotrophic Lateral Sclerosis **Dr Antonio Canosa**

COG-03 Subjective cognitive and behavioral changes in amyotrophic lateral sclerosis **Dr Monica Consonni**

COG-04 Distinct Predictors, Shared Architecture: Cognitive and Neurobehavioural Symptom Networks Across ALS Subtypes **Dr Monica Consonni**

COG-05 Cognitive and Behavioural Characteristics of SOD1-ALS: Findings from a Slovenian Case Series **Ms Sara Kadenšek**

COG-06 Apathy subtypes, anhedonia and negative mood in amyotrophic lateral sclerosis **Dr Ratko Radakovic**

COG-07 Longitudinal anti-saccade performance in amyotrophic lateral sclerosis **Mr Koen Demaegd**

COG-08 Behavioral factor scores are associated with altered functional and structural brain connectivity in ALS **Mrs Laura Hagedorn**

COG-09 Differentiating the Language Profile of Amyotrophic Lateral Sclerosis from Other Neurodegenerative Disorders Using the Japanese Language Screen **Dr Yasuhiro Watanabe**

COG-10 Prognostic implications of cognitive and behavioural impairment in Amyotrophic Lateral Sclerosis **Dr Francesca Palumbo**

COG-11 Behavioural Progression on the Beaumont Behavioural Inventory is predictive of survival in ALS **Dr Sophie Leonard**

COG-12 Motor and cognitive contributions to Neurofilament light chain levels in Amyotrophic Lateral Sclerosis: A Multi-Centre Study **Professor Philip Van Damme**

COG-13 The Impact of low dose IL2 on Cognition in ALS (MIROCALS) **Professor Sharon Abrahams**

COG-14 Definition of ALS-specific stressors in a clinical cohort **Dr Julia Finsel**

COG-15 Understanding psychological adjustment in patients with amyotrophic lateral sclerosis and their caregivers: a scoping review **Dr Marion Sommers-Spijkerman**

COG-16 Exploring pathways of care, disclosure experiences and illness acceptance in Amyotrophic Lateral Sclerosis: Insights from a limited resource setting **Professor Priya Thomas**

COG-17 Prevalence and predictors of prolonged griefdisorder, anxiety and depression in bereaved ALSfamily caregivers: a national survey of distressand support needs after bereavement **Dr Lone Knudsen**

COG-18 Bridging the gap between research and clinical practice: behavioural screening in specialist MND services **Professor Eneida Mioshi**

COG-19 Improving delivery of psychological care in MND (iDeliver MND): A study to develop recommendations for psychological care in the UK **Dr Emily J Mayberry**

COG-20 Understanding Psychological Care Pathways Across Greater Manchester and East Cheshire and Exploring People with MND's Experience of and Preference for Psychological Care **Miss Amy Shears**

COG-21 Co-designing Decision Support Tools for people living with MND **Dr Anne Hogden**

COG-22 Attitudes of health care professionals towards assisted dying in motor neurone disease: Preliminary report **Dr Mario Cecchini**

COG-23 CyberALS, a phenomenon that neurologists should worry about? **Dr Mariam Kekenadze**

Theme 12
Clinical Management and Support

CMS-01 The attitudes of individuals with or at risk of familial ALS on reproductive genetic testing: a qualitative study **Miss Shanice Allen**

CMS-02 Genetic ALS & FTD Community Attitudes Towards Clinical Monitoring Prior to Disease **Mr Mindy Uhrlaub**

CMS-03 Development and Acceptability of Patient Decision Aids for ALS/MND Genetic Testing **Dr Jade Howard**

CMS-04 Towards a European consensus framework for predictive genetic testing and longitudinal care in individuals at risk of genetic ALS/FTD **Dr Miguel Angel Rubio Perez**

CMS-05 "Give us and our children hope and information about ALS": Development of the ALS TALKS protocol for health care providers **Professor Melinda S.Kavanaugh**

CMS-06 Generating real world evidence (gRoWE) – a national mixed-methods service evaluation describing the landscape of ALSMND care in the UK **Ms Jennifer Bedford**

CMS-07 Cognitive assessment gaps: barriers to implementing evidence-based practice across MND Care Centres and Networks in the UK **Ms Jennifer Bedford**

CMS-08 Australian national surveys to understand MND care coordinator roles **Dr Karen Hutchinson**

CMS-09 'It takes a village to manage MND': Understanding inequities and co-designing solutions for equitable MND care in Australia **Dr Karen Hutchinson**

CMS-10 Reducing unwarranted variation in ALS care: development of Sweden's first national multidisciplinary care pathway **Dr Ulf Kläppe**

CMS-11 Sustainable personalized care for people with ALS and their caregivers in the Netherlands. **Dr Esther Kruitwagen**

CMS-12 Relationship Between Upper Limb Musculoskeletal Impairments and Custom Thermoplastic Orthoses Prescription in Motor Neuron Disease: A Retrospective Clinical Study **Dr Adriana Klein**

CMS-13 Developing an Impact Measurement Framework to Strengthen Impact of Investment in MND Research and Care **Professor David Phillips**

CMS-14 Respiratory Care and Ventilation (RCV) Committee of the Network for Excellence in Amyotrophic Lateral Sclerosis (NEALS) Patient Care Status-Future Needs Assessment Surveys 2010-2024: Longitudinal Platform for Identifying Gaps/Challenges in USA ALS Care/Educational Opportunities to Deploy Best Practices **Professor Benjamin Rix Brooks**

CMS-15 Implementing ALS@Home: A Theory-Informed, Nationwide Telemonitoring Model for Sustainable ALS Care **Dr Anita Beelen**

CMS-16 A Novel Telerehabilitation Platform for ALS/MND: Applying the Medical Research Council Framework for Complex Interventions **Ms Avril McTague**

CMS-17 Digital Technology Usability in MND–Preliminary findings from the Precision ALS TechnicALS study **Dr Fiona Kennedy**

CMS-18 Home-based physiological monitoring in ALS/MND: preliminary validation of the Home Health Hub platform **Mr David Fletcher**

CMS-19 TechnicALS: Measurement and Impact of Physical Impairment in ALS: Use of Digital Technologies – A Precision ALS Project **Dr Deirdre Murray**

CMS-20 Video supported compared with independent remote measurement of SVC; findings from the Precision ALS, TechnicALS study **Dr Deirdre Murray**

CMS-21 Development of bespoke, digital, clinical triage questionnaires for multidisciplinary MND care planning: a design science research approach **Mr David Murphy**

CMS-22 Remote measurement of Peak Cough Flow: A simple, acceptable and valid tool for remote respiratory monitoring: findings from the Precision ALS, TechnicALS study **Mr David Murphy**

CMS-23 A systematic review of the literature examining remote respiratory monitoring in amyotrophic lateral sclerosis **Miss Lucy Musson**

CMS-24 Relationship between accelerometer-derived physical behaviour and physical function in amyotrophic lateral sclerosis **Miss Nina Mitic**

CMS-25 Longitudinal trajectories of patient-reported distress and symptom burden in ALS/MND from a multidisciplinary outpatient care cohort **Ms Yuki Nakayama**

CMS-26 Longitudinal Associations Between Heart Rate Variability and Disease Progression in Amyotrophic Lateral Sclerosis: A Mixed-Effects Modeling Study **Ms Juri Sawada**

CMS-27 Using machine learning to identify patient-ventilator asynchrony during non-invasive ventilation in Amyotrophic Lateral Sclerosis/Motor Neuron Disease. **Professor David J Berlowitz**

CMS-28 Sleep-Disordered Breathing And Non-Invasive Ventilation In ALS: A Preliminary Study Of Clinical And Phenotypic Variability **Mr Martin Kavcic**

CMS-29 Addressing barriers to the uptake of non-invasive ventilation in MND/ALS using a structured co-design methodology **Dr Marnie Graco**

CMS-30 Adherence and Patient Experience after Outpatient versus Inpatient Initiation of Non-Invasive Ventilation in Amyotrophic Lateral Sclerosis: A Non-inferiority Randomized Controlled Trial **Dr Janne Stokholm**

CMS-31 Predictors of Adherence to Non-Invasive Ventilation in Amyotrophic Lateral Sclerosis: An exploratory analysis of a Non-inferiority Randomized Controlled Trial **Miss Anna Laursen**

CMS-32 The effect, feasibility and acceptability of Combined Hyperinflation and Expiratory Strength Training in Motor Neurone Disease: a prospective controlled trial (CHEST-MND PRO) **Dr Nicole Sheers**

CMS-33 Establishing the Measurement Properties of Peak Cough Flow in Amyotrophic Lateral Sclerosis **Dr Lauren Tabor Gray**

CMS-34 Characteristics and survival of patients with amyotrophic lateral sclerosis receiving invasive mechanical ventilation: Insights from a Slovenian population **Pija Puksic Simek**

CMS-35 Understanding the Complexity of Living with and Managing Secretions in Amyotrophic Lateral Sclerosis (ALS): A Complex Intervention Systematic Review **Dr Caroline Barry**

CMS-36 A novel co-designed, digitally enabled, intervention to support a structured multidisciplinary approach to cough and secretion management for amyotrophic lateral sclerosis **Charlotte Massey**

CMS-37 Bulbar management by speech-language pathologists in Canada: Practices, barriers and facilitators in ALS care **Professor Liziane Bouvier**

CMS-38 Optimizing oropharyngeal dysphagia screening in ALS: the complementary role of non-invasive bedside screening tools **Miss Camilla Cattaneo**

CMS-39 FEES-based characterization of dysphagia in ALS/MND: preliminary findings from a multidisciplinary clinic **Ms Stephanie A. Riera**

CMS-40 Integrating bioelectrical impedance analysis into routine ALS care **Dr Willeke Kruithof**

CMS-41 Associations Between Dietary Intake, Circulating Lipid Profiles and Disease Progression in Amyotrophic Lateral Sclerosis **Ms Amber Sewell-Green**

CMS-42 Predictive Value of the Modified Controlling Nutritional Status Score for Critical Events in Patients with Amyotrophic Lateral Sclerosis **Dr Taku Tazuma**

CMS-43 Timing of Dietetic Intervention in ALS/MND: A 2024 Retrospective Service Evaluation at the Tertiary Neurology MND Care Centre (London) **Mrs Justyna Reinert**

CMS-44 Gastrostomy Supports Nutritional Recovery in Motor Neurone Disease Despite Severe Pre-Gastrostomy Weight Loss and Low Body Mass Index **Mrs Meaghan Joyce**

CMS-45 Temporal Relationships Between Disease Milestones and Feeding Tube Placement in ALS **Ms Olivia Lallouz**

CMS-46 Enteral feeding method changes in Motor Neurone Disease: a service evaluation **Mrs Emily Kirk**

CMS-47 Reviewing the impact of an additional CT abdomen to our gastrostomy pathway **Mrs Jessica Newman**

CMS-48 Development of a Multidisciplinary Team (MDT) Pathway for Radiological Inserted Gastrostomy (RIG) in MND: a single site experience at London Teaching Hospital **Dr Clare Galtrey**

CMS-49 An Examination of Speech Function, Social Withdrawal, and Loneliness in People Living with ALS **Dr Kathryn Connaghan**

CMS-50 Associations Between Disease Severity and Social Connection in ALS **Dr Kathryn Connaghan**

CMS-51 Remote speech measures as predictors of communication stage; findings from the Precision ALS TechnicALS study **Ms Lesley Doyle**

CMS-52 Remote monitoring of tongue pressure in MND; preliminary findings from the Precision ALS TechnicALS study **Ms Lesley Doyle**

CMS-53 An Android App-Based Korean Voice Banking Platform with AI-Powered Personalized Speech Synthesis for People with ALS **Professor Hyeon Sik Chu**

CMS-54 Developing the Communication and Relational Personhood Questionnaire (CRPQ): A novel clinical outcome assessment for communication technologies **Ms Zoe Lalji**

CMS-55 Communication and computer control based on voluntary brain activity changes in late-stage ALS: The benefits and challenges of an implanted Brain-Computer Interface **Dr Anouck Schippers**

CMS-56 Beyond communication: relational personhood in Locked-In Syndrome and implications for Brain-Computer Interfaces **Mr Bouke Van Balen**

CMS-57 Understanding How and Why Family Carers Engage with Health and Social Care Services in Motor Neurone Disease: A Realist Evaluation **Dr Eleanor Wilson**

CMS-58 Informal Caregiving in Amyotrophic Lateral Sclerosis: Post-Diagnostic Support Needs and Implications for Clinical Practice **Dr Theocharis Stavroulakis**

CMS-59 Strengthening support for families affected by parental ALS: Healthcare professionals' perspectives **Dr Nina Malmström**

CMS-60 Living outside the ALS Home: Everyday Experiences, Challenges and Needs of Adult Children with a Parent with ALS **Dr Lene Klem Olesen**

CMS-61 Understanding the Distinct Lived Experience of Younger Adults Living with ALS: Insights from a Mixed-Methods Qualitative Study **Ms Mary Michael**

CMS-62 Addressing behavioural symptoms in motor neurone disease: A scoping review of informal carer interventions across FTLD **Dr Ana Paula Trucco**

CMS-63 Psychological Support and Care Coordination in Rare Disease Care such as ALS: A Survey of Designated Core and Collaborating Hospitals in Japan **Dr Yuji Tanaka**

CMS-64 Early integration of Neuropalliative care in Amyotrophic Lateral Sclerosis: Clinical profile, needs and service utilisation from a limited resource setting **Professor Priya Thomas**

CMS-65 Highlights of the Global 2025 Fundamental Rights Survey for People Living with ALS/MND and their Caregivers **Ms Catherine Cummings**

CMS-66 A Quality-of-Life Index of the 2023 and 2025 Fundamental Rights of People Living with ALS/MND Worldwide **Ms Catherine Cummings**

CMS-67 A Quality-of-Life Index of the Fundamental Rights of People Living with ALS/MND Worldwide **Dr Martinade Majo**

CMS-68 Developing an invitation model for patient-centred advance care planning and end-of-life communication: Insights from people with amyotrophic lateral sclerosis and family caregivers **Mrs Brianna Adams**

CMS-69 A clinical tool to predict the timing of key ALS/MND milestones and support shared decision making **Dr Ahmed Elazzab**

CMS-70 POSTER WITHDRAWN

CMS-71 Manner of Death in ALS/MND: A Review **Professor Mark Bromberg**

CMS-72 Can survival analysis capture the impact of palliative care in ALS? Evidence from mobile palliative home visits in a tertiary ALS centre **Ms Ana Kuder**

CMS-73 A qualitative study of factors that support family members to deliver complex care at home to people with MND who use tracheostomy ventilation **Dr Nicola Turner**

CMS-74 Safety and Feasibility of Pencil-Point Spinal Needles for Repeated Intrathecal Tofersen Administration in Patients with SOD1-ALS **Dr Kota Bokuda**

CMS-75 Establishing the tofersen service for people with SOD1 ALS in Southwest London and Surrey: Audit of a single-centre experience at St Georges Hospital, London **Dr Viva Levee**

CMS-76 Long-Term Effects of Tofersen in SOD1-ALS:A Two-Centre Real-World Cohort Study **Dr Fouke Ombelet**

CMS-77 Tofersen in SOD1-ALS: Clinical outcomes and neurofilament light-chain response in a multicenter observational study over 51 months **Mrs Peggy Schumann**

CMS-78 Real-world experience with tofersen in SOD1-ALS patients in Israel **Dr Tahani Sheikh Saker**

CMS-79 Real-World Evidence on Treatment Retention, Safety, and Tolerability of Edaravone in Canadian Patients with Amyotrophic Lateral Sclerosis **Mr Dung Pham**

CMS-80 Real-World Characterization of Symptom Burden and Patient-Reported Outcomes Following THC:CBD Treatment in Amyotrophic Lateral Sclerosis **Dr Susanne Spittel**

CMS-81 Dextromethorphan/quinidine for bulbar symptom control in ALS using remote ALSFRS-R self-assessments **Ms Marie-Thérèse Henke**

CMS-82 Statin therapy and disease progression in Amyotrophic Lateral Sclerosis in an Asian cohort **Dr Kexin Ang**

CMS-83 Venous Thromboembolism in Veterans with ALS: A Single Center Retrospective Study **Dr Huned Patwa**

CMS-84 A single-centre three-year retrospective analysis of Non-invasive Ventilation (NIV) support for Percutaneous Gastrostomy (PEG) insertion in Motor Neuron Disease (MND) patients **Dr Alarmeluvalli Sivaramakrishnan**

CMS-85 Atypical Amyotrophic Lateral Sclerosis Presenting as Parkinsonism with Acupuncture Sensitivity: A Case Report **Mr Kefan Li**

CMS-86 A New Utility Index for ALS from the ALSFRS-R for Use in Economic Evaluation **Miss Amy Clift**

CMS-87 The NOVA ALS Survival Model: A Retrospective Time-to-Event Analysis of a Single-Center Registry at Nova Southeastern University **Professor Eduardo Locatelli**

CMS-88 A Novel Isometric Muscle Strength Decline Score (ΔNova-IMS) Outperforms ALSFRS-R Decline (ΔFRS) in Predicting Survival: A Single-Center Cohort Study **Professor Eduardo Locatelli**

CMS-89 Longitudinal Quality of Life Trajectories and Their Association with Functional Decline in ALS: A Linear Mixed-Effects Analysis **Professor Atchayaram Nalini**

CMS-90 Selecting Optimal Clinical Outcome Measures in Amyotrophic Lateral Sclerosis: Achieving Consensus via Modified Delphi Method **Dr Jeremy Slayter**

CMS-91 Assessing ALS Preclinical Research Interests in the Italian ALS Community **Dr Marco Peviani**

CMS-92 Navigating a Balance between Centralising Clinical Research and Decentralising Specialist Care for people living with Kennedy's Disease in the UK **Mr Luca Zampedri**

CMS-93 Development of an automated air stacking device for MND: A user-centered iterative design approach **Dr Jaap Bakers**

CMS-94 POSTER WITHDRAWN

Theme 13

Primary Lateral Sclerosis and Upper Motor Neurone Degeneration

PLS-01 The epidemiology of Primary Lateral Sclerosis: results from a population-based cohort **Dr Rosario Vasta**

PLS-02 Phenoconversion from Primary Lateral Sclerosis to UMN-Predominant ALS: Timing and Clinical Predictors in a Single-Center Cohort **Mr Yongchan Kim**

PLS-03 The Multidimensional Impact of Spasticity in Amyotrophic Lateral Sclerosis and Primary Lateral Sclerosis: Results from an International Survey **Dr Kayla Chomko**

PLS-04 Validation of the Italian Self-Administered PLSFRS and Its Relationship with Clinical Measures in Primary Lateral Sclerosis **Dr Giorgio Pellegrino**

PLS-05 Absence of muscle-derived circulating proteins distinguish PLS from ALS **Dr David Lester**

PLS-06 Validation of a Mobile AR-Based Gait Assessment Tool for Remote Monitoring in ALS and PLS; Preliminary Findings from a Precision ALS TechnicALS Study **Dr Marc T J Elliott**

PLS-07 Quantitative gait analysis reveals distinct patterns associated with pyramidal involvement in amyotrophic lateral sclerosis: A cross-sectional study **Mr Nan Hu**

PLS-08 Quantitative Susceptibility Mapping and Volumetric Analyses Along with Preliminary Longitudinal Findings in Upper Motor Neuron Disorders and ALS **Ms Sophia Mostowy**

PLS-09 Corticospinal subfiber neurite density index detects upper motor neuron degeneration in prediagnostic patients with sporadic amyotrophic lateral sclerosis **Dr Shuangwu Liu**

PLS-10 Identification of Healthy and Diseased Upper Motor Neurons in the ALS Motor Cortex Through Cryptic Exon Detection Using Single-Cell Spatial Transcriptomics and Long-Read snRNA Sequencing **Dr Frank Diaz**

PLS-11 The common and unique cellular events that lead to neurodegeneration in the presence of spastin-HSP and profilin-ALS mutations are revealed by proteomic analyses of FACS-purified upper motor neurons **Mr Richard Wolff**

PLS-12 Proteomic Analyses Begin to Reveal Target Engagement and Efficacy of NU-9 in a Model of Misfolded SOD1 Toxicity **Mr Richard Wolff**

PLS-13 “Jumping genes” in motor neuron disease: uncovering the regulatory role of SVA elements in iron homeostasis **Mr Maseeh Wafa**

PLS-14 Abnormal PISD/PE Metabolic Axis in FUS-ALS Mediates Lipid-Autophagy-Mitochondrial Homeostasis Imbalance in Motor Neurons **Fuchen Liu**

PLS-15 Developing selective and directed gene delivery to upper motor neurons by ultrasound-mediated opening of the blood-brain barrier **Dr Hande Ozdinler**

PLS-16 Study of therapeutic effects of levetiracetam on walking performance in primary lateral sclerosis (STEP-PLS): protocol for a phase II randomized, double-blind, placebo-controlled, cross-over two site clinical study **Dr Matti Allen**

PLS-17 Hip-Wearable Lower Limb Exoskeleton for Spasticity Management in Primary Lateral Sclerosis (PLS): A Case Study **Mrs Gwyneth Moe**

WIP

Work in Progress

BM-01 Accelerating ALS Clinical Trial Development Through an Integrated Research Network: Mapping NEALS Engagement Across the Clinical Trial Lifecycle **Mrs Carly Allen**

BM-02 PLUS ALS – an international biomarker platform aimed at accelerating the discovery and development of therapies for ALS **Hannah Brouwer**

BM-03 Master Protocol IND Lifecycle Management - The HEALEY ALS Platform Trial Experience **Ms Marianne Chase**

BM-04 Lessons from Cancer: Can Population-Based Registry Principles Be Adapted for ALS/MND Worldwide? **Mrs Lori Larson Heller**

BM-05 Would Mandatory ALS Reporting Improve Disease Understanding and Therapeutic Development? Evidence from U.S. and European Surveillance Models **Mrs Lori Larson Heller**

BM-06 Motor Neuron Disease is now a Notifiable Disease in New South Wales, Australia **Professor Dominic Rowe**

BM-07 The ALSMOND population based registry for Neuromuscular and Motoneuron diseases in Northwest Germany: the Hanse experience **Dr Clemens G. Runge**

BM-08 The Vanderbilt ALS Research Center Biorepository: A Longitudinal Biospecimen Resource for ALS and Related Disorders **Dr Nicola Rutherford**

BM-09 Toward a multimodal, longitudinal ALS data resource: linking patient-mediated electronic health records with natural history study data across functional, medication, and laboratory measures **Hannah Walters**

BM-10 Framework for integrating and visualizing multimodal clinical ALS data **Dr Alan Kaplan**

BM-11 Development of a genotyper for neurologically-relevant repeat expansions using nanopore sequence data **Mr Harvey Brezina Conniffe**

BM-12 Valosin-containing Protein Mutation: A Genetic Link Between Familial Amyotrophic Lateral Sclerosis and Inclusion Body Myopathy **Mr Hunter Stearns**

BM-13 Predictive AI genomics for novel therapeutic target discovery in ALS **Ms Helena Golaszewska**

BM-14 Defining Gene Regulatory Networks in ALS via Single-Nucleus Multi-Omics **Mr Joseph Guidubaldi**

BM-15 Phenotype Risk Scores (PheRS) may offer an opportunity for improved electronic health record (EHR)-based phenotyping for biobank-scale genetic studies of ALS **Miss Autumn Morrow**

BM-16 The 2D:4D Finger-Length Ratio Reflects Gonadotropic Compensation Rather Than Disease Severity in Spinal and Bulbar Muscular Atrophy **Mr Seong-il Oh**

BM-17 Spinal and Bulbar Muscular Atrophy (Kennedy's Disease) Presenting as Atypical Parkinsonism and Motor Neuron Disease with a Low-Range CAG Expansion: A Case Report **Dr Frederico Jorge**

BM-18 Amyotrophic lateral sclerosis with ataxia: an atypical presentation of ATXN2 **Dr Cynthia Bodkin**

BM-19 Investigating the role of TDP-43 in targeting mRNAs to organelles, specifically mitochondria **Ms Elisa Calligaro**

BM-20 Beyond TDP-43: Identifying Protein and RNA Determinants of Cryptic Exon Inclusion in ALS **Mr Tyler Chapman**

BM-21 Contribution of GU-rich RNA to TDP-43 Pathology in ALS **Dr Charles Ducker**

BM-22 Developing an Aged Neuronal Model of TDP-43 Mislocalisation to Investigate RNA Processing Defects in ALS **Miss Faye Johnson**

BM-23 Identifying early transcriptomic signatures of TDP-43 loss-of-function in ALS **Miss Shubha Kamath**

BM-24 Dissecting a TDP-43 knock-in allelic series to yield diverse MND drug targets **Dr Ravindra Prajapati**

BM-25 Identifying the TDP-43 interactome by use of biotinylation by antibody recognition-mass spectrometry in models of ALS **Miss Paulina Szwaja**

BM-26 Illuminating the release of TDP-43 from cells using nanoluciferase **Mr Tijmen van Slageren**

BM-27 Shifting the neuron-centric view and shining light on astrocyte specific motor neuron disease drivers **Miss Viktoria Brachmaier**

BM-28 Direct transdifferentiation of neurons from patient fibroblasts to improve ALS-FTD modelling **Dr Aleksandra Mech**

BM-29 Methylglyoxal-induced senescence: an experimental model of accelerated aging with implications for ALS **Mrs Veronica Noches**

BM-30 Studying the early developmental effects of C9ORF72 repeat expansion in ALS using cortical brain organoids **Miss Denise Van Der Heijden**

BM-31 Contribution of spinal V2 interneurons to ALS etiopathogenesis using a new TARDBP mouse model **Miss Mélina Finet**

BM-32 Establishing a Drosophila melanogaster ALS exercise model: investigating the impact of prolonged exercise on motor symptom onset, survival and pathology **Miss Jaimee Kennedy**

BM-33 Real-time free radical tracking related to oxidative stress in a 2D ALS model with fluorescent nanodiamonds quantum relaxometry **Mx Franek Sierpowski**

BM-34 Assessing the potential role of chloroviruses as contributors to Guamanian ALS **Dr Gary Pattee**

BM-35 Dysmelinating motor nerve pathology in lower motor neuron disease: report of two cases suggesting pre-degenerative altered axon-myelin coupling **Dr Nilo Riva**

BM-36 Tracking Axon Degeneration via Sensory Skin Fibers in ALS: A D50-Based Analysis **Ms Dilan Mustu**

BM-37 Tissue- and Stage-Specific Lipidomic Changes in TDP-43 ALS Mice **Miss Saeedeh Robatjazi**

BM-38 ALS-GUT: Metagenomic Characterization of the Gut Microbiome in Amyotrophic Lateral Sclerosis and Its Association with Clinical Phenotypes **Professor Gaelle Bruneteau**

BM-39 Novel biological agents in the treatment of amyotrophic lateral sclerosis (ALS) based on progranulin/granulin structure **Ms Tanaj Ahmed**

BM-40 RNA-Templated, RAD52-Mediated Genomic Correction of C9ORF72 Hexanucleotide Repeat Expansions **Ms Maanya Dixit**

BM-41 Targeting Excitotoxicity in ALS: ASO-Mediated EAAT2 Splicing Correction **Ms Caitlyn Vicars**

BM-42 Restoring Nuclear Pore Function in ALS via ASO-Mediated CHMP7 Knockdown **Ms Caitlyn Vicars**

BM-43 The TWITCH study: Study Protocol to Assess the Added Diagnostic Value of Muscle MRI and Ultrasound in ALS **Miss Karleen Oonk**

BM-44 High- and Ultra-High-Field MRI–Histopathological Correlates of ALS Neuropathology **Ms Jacqueline Palik**

BM-45 Wearable ultrasound enables quantitative monitoring of fasciculations as an early pharmacodynamic biomarker in ALS: an exploratory proof-of-concept study **Dr Chizu Saeki**

BM-46 Longitudinal Whole-Body Muscle MRI as a Multimodal Outcome Measure in ALS: A Deep Phenotyping Study **Dr Oliver Ziff**

BM-47 Digital Remote Monitoring in Motor Neuron Disease: A Systematic Review of Technologies and Clinical Translation **Dr Yinhuan Dong**

BM-48 Everyday Digital Devices for Multimodal Functional Assessment in Motor Neuron Disease: A Pilot Feasibility Study **Dr Yinhuan Dong**

BM-49 The DIGITIZE Wearable Substudy in ALL ALS: Study Design, Enrollment Progress, and Participant Compliance **Dr Robert Bowser**

BM-51 Machine learning for onset-specific patterns of longitudinal Amyotrophic Lateral Sclerosis (ALS) functional rating scale decline **Dr Robert Steinbach**

BM-52 Epidemiological Study Of Clinical Progression And Cognitive Function In Brazilian Patients With ALS **Dr Agnes Nishimura**

BM-53 Cognitive Models in Amyotrophic Lateral Sclerosis – A population-based study **Dr David Mothersill**

BM-54 Longitudinal trajectories of decremental responses in patients with ALS **Miss Veerle Van Harmelen**

BM-55 Lifetime Physical Activity as a Risk Factor for ALS: A Retrospective Questionnaire-Based Study in Patients with ALS in Germany **Lola Marsen**

BM-57 The combination of RT1999 and RT1972 from preclinical to clinical development
Dr Kim Staats

BM-58 PREVAiLS (Pridopidine Phase 3 Study To Evaluate Efficacy And Safety In ALS) a Phase 3, Randomized, Double-Blind, Placebo-Controlled Study In ALS **Dr Bernd-Jan Sanson**

BM-59 Transcranial Pulse Stimulation (TPS) for amyotrophic lateral sclerosis: design of an ongoing randomized sham-controlled phase 2 trial. NEU-TPS-ALS-01 **Mr Sergio Vidal Notari**

CP-01 Survey Design to Deployment: Process Insights and User Experience Outcomes from an ALS Community Needs Assessment
Ms Vanessa I Martinez

CP-02 Italian ALS Coalition Update: Delivery of a 44,000 signature petition to Italian Parliament in 2026 **Professor Jessica Mandrioli**

CP-03 Patient and public involvement and engagement (PPIE) in MND-SMART
Ms Chloe Parker

CP-04 An ALS Association study on patient and caregiver preferences for intrathecally-administered ALS treatments: Findings from phase one in-depth interviews **Dr Sarah Parvanta**

CP-05 From Research Access to Research Understanding: A New Model of Science-Focused Education and Advocacy in ALS **Dr Nadia Sethi**

CP-06 Mapping Access to Motor Neurone Disease Clinical Trials: Geographical Distribution of Patients Enrolled at UCLH (2024–2026):A Service Evaluation of National Clinical Research Recruitment **Mr Roy Carganillo**

CP-07 Improving Equity and Inclusion in Motor Neurone Disease Clinical Research: Addressing Research Bias and Geographical Barriers
Mr Roy Carganillo

CP-08 Driving more equitable access to healthcare & health research: Exploring Equality, Diversity & Inclusivity through Patient & Public Involvement **Dr Kathleen Kane**

CP-09 Globalising MND Education: Adapting a MOOC for Cultural and Health System Diversity
Dr Sharn Perry

CP-10 The ALS Information Point
Dr Eirlys Pijpers

CP-11 Developing resources to support the sharing of familial risk information in MND/ ALS families **Dr Jade Howard**

CP-12 Sustaining Agency in ALS Patients with Impaired Communication: An Interactional Approach **Dr Yui Hasegawa**

CP-13 Voice and Message Banking in MND During and Beyond COVID-19: Challenges, Inequities, and Service Gaps in England
Mrs Helen Brewah

CP-14 Disrupted Communication Care in Motor Neurone Disease: Findings from a Voice and Message Banking Study during the COVID-19 Pandemic and Since in England
Mrs Helen Brewah

CP-15 Using voice cloning in patients with ALS: a pilot study regarding success factors and ethical concerns **Professor Liziane Bouvier**

CP-16 Beyond Expectations: Restoring voice and Oral Intake in a tracheostomy ventilated person living with MND (plwMND) through interdisciplinary working **Miss Linda Vardy**

CP-17 'Concentrate like hell on what you CAN do': an exploration of living well with motor neurone disease **Ms Rachel Thomson**

CP-18 Supporting Life Possibilities in ALS/MND: Towards Care for a Lived Life Beyond Survival and Treatment Decisions **Mrs Yuriko Sakai**

CP-19 The experience of adult children caring for a parent with Motor Neurone Disease
Mr Silvan Aidasani

CP-20 Psychosocial Rehabilitation Needs and Preferences of Families with Dependent Children Affected by Parental ALS: Insights from the "ALS in the Family" Intervention **Dr Lene Klem Olesen**

CP-21 Developing a co-designed support Intervention for families living with parental ALS: A feasibility study protocol
Professor Anneli Ozanne

CP-22 Work situation for personal assistants in ALS: Experiences of people living with ALS, relatives and personal assistants
Ms Jenny Geffen

CP-23 An evaluation of psychological support offered to carers of people living with ALS/MND at at the Oxford MND Care Centre, UK
Dr Rachel Woolrich

CP-26 Navigating Complex Conversations in ALS: The Provider's Perspective **Mrs Mandi Bailey**

CP-27 Evaluating the VA ALS System of Care: A Literature Review **Mrs Mandi Bailey**

CP-28 Transformational leadership as a framework for clinical leadership development in case management nursing within multidisciplinary ALS units: a narrative literature review **Mrs Pilar Cordero Vázquez**

CP-29 Co-designing MND Together, a care co-ordination intervention for people with Motor Neuron Disease (MND) **Dr Bryony Waters-harvey**

CP-30 Mapping the Latent Structure of Behavioural Progression in ALS **Dr Sophie Leonard**

CP-31 Cross-Cultural Adaptation and Validation of the Slovenian version of the Edinburgh Cognitive and Behavioural Amyotrophic Lateral Sclerosis Screen (ECAS): Preliminary Results **Ms Ana Kuder**

CP-32 Longitudinal home handgrip monitoring with the Home Health Hub: preliminary force-time curve outputs in ALS/MND **Mr David Fletcher**

CP-33 A human-building integrated digital twin system for adapting home environments to gait deterioration in people with ALS **Professor Cao Wenjun**

CP-34 Early clinical outcomes and feasibility of hands-free air stacking (iStack) in motor neuron disease **Dr Jaap Bakers**

CP-35 Exercise and MND- evidence, clinical reasoning and the patient perspective. **Mrs Kate Bradbury**

CP-36 Implementation of a structured patient-reported outcome assessment following ultrasound-guided botulinum toxin treatment for sialorrhoea: a service evaluation **Miss Michaela Waltho**

CP-37 Evaluating ALS patient education and practices related to riluzole administration **Dr Sarah Dehoney**

CP-38 Familial ALS patient associated with an aggressive SOD1 mutation: clinical and neurophysiological trajectories under tofersen treatment **Professor Mamede De Carvalho**

CP-39 Global Research Trends and Evidence Architecture of Acupuncture for Amyotrophic Lateral Sclerosis: Bibliometric Analysis and "Bench-to-Bedside closed Loop" Framework based on Knowledge Graph **Mr Kefan Li**

CP-40 Rowland Payne syndrome mimicking motor neuron disease – a case report **Mr Krzysztof Nieporęcki**

Thank you

With grateful thanks to the sponsor of the 37th International Symposium on ALS/MND Poster Sessions

NOVARTIS

Notes

Notes

© **MND Association, 2026**
Motor Neurone Disease Association
Francis Crick House
6 Summerhouse Road
Moulton Park
Northampton NN3 6BJ

Tel: 01604 250505
Email: enquiries@mndassociation.org
Website: mndassociation.org

Registered Charity no. 294354

MND Association

37th International Symposium on ALS/MND